A700V107M006ATE015

A700, Aluminum, Polymer Aluminum, 100 uF, 20%, 6.3 VDC, -55/+125°C, 2 mm, 1.3 mm, 2817 / 7343

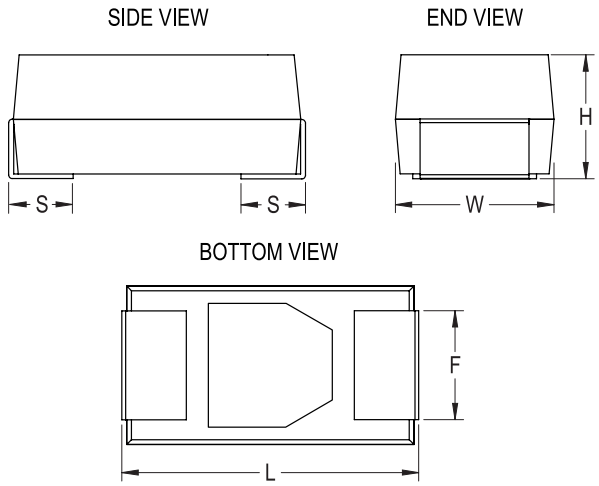

Click here for the 3D model.

General Information	
Series	A700
Dielectric	Polymer Aluminum
Style	SMD Chip
Description	Surface Mount, Polymer Aluminum
RoHS	Yes
Termination	Tin
Qualifications	UL94V-0
AEC-Q200	No
Halogen Free	Yes
Typical Component Weight	132.72 mg
Shelf Life	104 Weeks
MSL	3

Dimensions	
L	7.3mm +/-0.3mm
W	4.3mm +/-0.3mm
H	2mm MAX
S	1.3mm +/-0.3mm
F	2.4mm +/-0.1mm

Packaging Specifications	
Packaging	T&R, 180mm
Packaging Quantity	1000

Specifications	
Capacitance	100 uF
Tolerance	20%
Voltage DC	6.3 VDC
Temperature Range	-55/+125°C
Rated Temperature	125°C
Life	2000 Hrs (125C)
Dissipation Factor	6% 120Hz 25C
ESR	15 mOhms (100kHz 25C)
Ripple Current	4200 mA (rms 100kHz)
Leakage Current	25.2 uA (5min 25°C)

Statements of suitability for certain applications are based on our knowledge of typical operating conditions for such applications, but are not intended to constitute - and we specifically disclaim - any warranty concerning suitability for a specific customer application or use. This Information is intended for use only by customers who have the requisite experience and capability to determine the correct products for their application. Any technical advice inferred from this Information or otherwise provided by us with reference to the use of our products is given gratis, and we assume no obligation or liability for the advice given or results obtained.

© 2006 - 2025 YAGEO