C4BSWBX4150ZANJ

C4BS, Film, Metallized Polypropylene, Power, 1.5 uF, 5%, 2,000 VDC, 700 VAC, 70°C, 41 mm

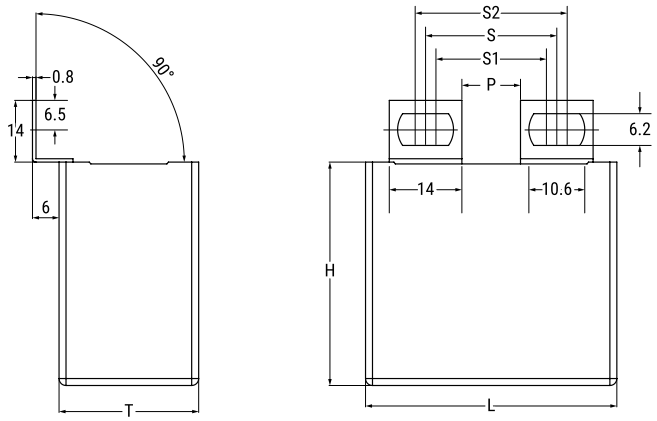

Click here for the 3D model.

General Information	
Series	C4BS
Dielectric	Metallized Polypropylene
Style	Radial
Features	IGBT Circuit
RoHS	Yes
Lead	Flat Tabs
AEC-Q200	No
Typical Component Weight	157.1 g
Miscellaneous	KEMET Style A Tabs.

Dimensions	
L	57.5mm +1.2/-0.7mm
H	50mm +0.3/-0.7mm
T	35mm +0.5/-0.7mm
S	41mm +/-0.2mm
S1	37mm +/-0.2mm
S2	45mm +/-0.2mm
P	25mm NOM

Packaging Specifications	
Packaging	Bulk, Bag
Packaging Quantity	21

Specifications	
Capacitance	1.5 uF
Tolerance	5%
Voltage DC	2000 VDC
Voltage AC	700 VAC
Temperature Range	-40/+85°C
Rated Temperature	70°C
Max dV/dt	854 V/us
ESR	3.5 mOhms (100kHz)
Ripple Current	31 Amps (100kHz 70C), 1280 Amps (Peak)
Inductance	48 nH

Statements of suitability for certain applications are based on our knowledge of typical operating conditions for such applications, but are not intended to constitute - and we specifically disclaim - any warranty concerning suitability for a specific customer application or use. This Information is intended for use only by customers who have the requisite experience and capability to determine the correct products for their application. Any technical advice inferred from this Information or otherwise provided by us with reference to the use of our products is given gratis, and we assume no obligation or liability for the advice given or results obtained.

© 2006 - 2025 YAGEO