EDT108M010S9PAA

EDT, Aluminum, Aluminum Electrolytic, 1,000 uF, 20%, 10 VDC, -40/+125°C

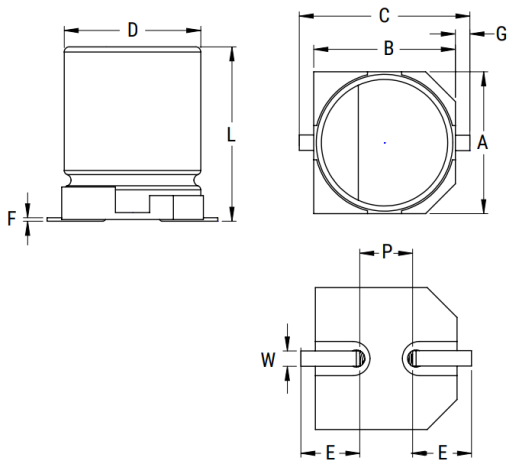

Click here for the 3D model.

General Information	
Series	EDT
Dielectric	Aluminum Electrolytic
Style	SMD Can
Description	Surface Mount, Aluminum Electrolytic
RoHS	Yes
Lead	V-Chip
Qualifications	AEC-Q200
AEC-Q200	Yes

Dimensions	
D	10mm +/-0.5mm
L	10.2mm +/-0.3mm
W	0.9mm +/-0.2mm
F	0.3mm MAX
A	10.3mm +/-0.2mm
B	10.3mm +/-0.2mm
C	13mm MAX
E	3.2mm +/-0.2mm
G	0.7mm +/-0.2mm
P	4.6mm +/-0.2mm

Packaging Specifications	
Packaging	T&R

Specifications	
Capacitance	1,000 uF
Tolerance	20%
Voltage DC	10 VDC, 13 VDC (Surge)
Temperature Range	-40/+125°C
Rated Temperature	125°C
Life	2000 Hrs
Dissipation Factor	26%
Ripple Current	180 mAmps (120Hz 125C)
High Temperature Solder	Yes
Leakage Current	100 uA (2min 20°C)
Impedance Ratio at -25C	2
Impedance Ratio at -40C	3

Statements of suitability for certain applications are based on our knowledge of typical operating conditions for such applications, but are not intended to constitute - and we specifically disclaim - any warranty concerning suitability for a specific customer application or use. This Information is intended for use only by customers who have the requisite experience and capability to determine the correct products for their application. Any technical advice inferred from this Information or otherwise provided by us with reference to the use of our products is given gratis, and we assume no obligation or liability for the advice given or results obtained.

© 2006 - 2026 YAGEO