EXV107M010A9GAA

EXV, Aluminum, Aluminum Electrolytic, 100 uF, 20%, 10 VDC, -55/+105°C

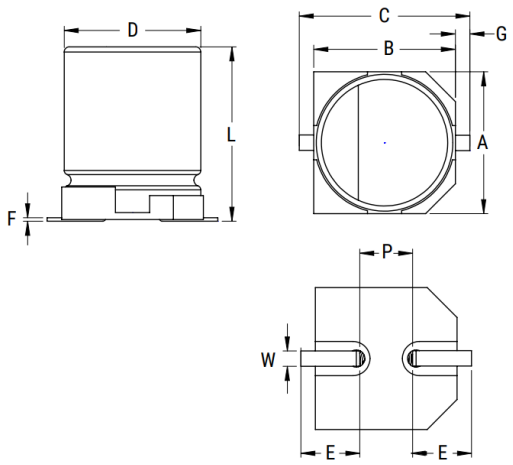

Click here for the 3D model.

General Information	
Series	EXV
Dielectric	Aluminum Electrolytic
Style	SMD Can
Description	Surface Mount, Aluminum Electrolytic
RoHS	Yes
Lead	V-Chip
AEC-Q200	No

Dimensions	
D	6.3mm +/-0.5mm
L	5.4mm +/-0.3mm
W	0.65mm +/-0.1mm
F	0.3mm MAX
A	6.6mm +/-0.2mm
B	6.6mm +/-0.2mm
C	7.8mm MAX
E	2.4mm +/-0.2mm
G	0.35mm +0.15/-0.2mm
P	2.1mm +/-0.2mm

Packaging Specifications	
Packaging	T&R, 380mm

Specifications	
Capacitance	100 uF
Tolerance	20%
Voltage DC	10 VDC, 13 VDC (Surge)
Temperature Range	-55/+105°C
Rated Temperature	105°C
Life	3000 Hrs
Dissipation Factor	19%
ESR	0.52 Ohms (100kHz 20C)
ESR	520 mOhms
Ripple Current	190 mAmps (100kHz 105C), 133 mAmps (120Hz 85C)
Compare Ripple Current at 120Hz	0.133
High Temperature Solder	Yes
Leakage Current	10 uA (2min 20°C)
Impedance Ratio at -25C	2
Impedance Ratio at -40C	3

Statements of suitability for certain applications are based on our knowledge of typical operating conditions for such applications, but are not intended to constitute - and we specifically disclaim - any warranty concerning suitability for a specific customer application or use. This Information is intended for use only by customers who have the requisite experience and capability to determine the correct products for their application. Any technical advice inferred from this Information or otherwise provided by us with reference to the use of our products is given gratis, and we assume no obligation or liability for the advice given or results obtained.

© 2006 - 2025 YAGEO