# ALS80A163KF100

ALS80, Aluminum, Aluminum Electrolytic, 16,000 uF, 20%, 100 VDC, -40/+105°C, 22.2 mm

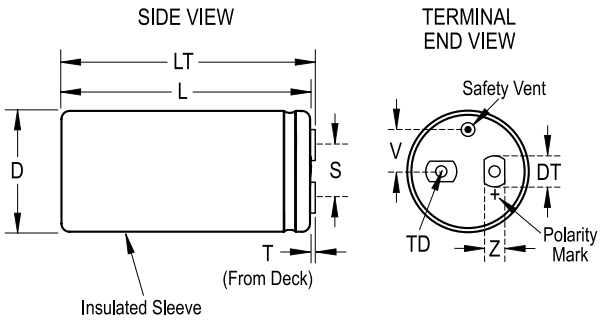


Click here for the 3D model.

| General Information | |
|---|---|
| Series | ALS80 |
| Dielectric | Aluminum Electrolytic |
| Description | Screw Terminal, Aluminum Electrolytic |
| RoHS | Yes |
| Lead | Oval Threaded Inserts M5 |
| Mounting | Through-Hole |
| AEC-Q200 | No |
| Halogen Free | Yes |
| Typical Component Weight | 300 g |
| Notes | Dimensions D And L Include Sleeving. MS (MxH) = M12x16. Mounting Clamp (Sold Separately): V4/2737 |
| Shelf Life | 156 Weeks |

| Dimensions | |
|---|---|
| D | 51mm +/-1mm |
| L | 105mm +/-2mm |
| T | 5.5mm +/-0.5mm |
| S | 22.2mm +/-0.5mm |
| DT | 13mm +/-0.5mm |
| LT | 110.5mm +/-1mm |
| TD | 10mm MIN |
| V | 13.7mm NOM |
| Z | 10mm NOM |

| Packaging Specifications | |
|---|---|
| Sleeving | Yes |
| Packaging | Tray |

| Specifications | |
|---|---|
| Capacitance | 16,000 uF |
| Tolerance | 20% |
| Voltage DC | 100 VDC, 115 VDC (Surge) |
| Temperature Range | -40/+105°C |
| Rated Temperature | 105°C |
| Life | 7000 Hrs (Rated Voltage And Ripple Current At 105C), 11000 Hrs (Rated Voltage at 105C) |
| ESR | 23 mOhms (100Hz 20C), 19 mOhms (10kHz 20C) |
| Ripple Current | 14.7 Amps (100Hz 105C), 17.8 Amps (10 kHz 105C) |
| Leakage Current | 4800 uA |

Statements of suitability for certain applications are based on our knowledge of typical operating conditions for such applications, but are not intended to constitute - and we specifically disclaim - any warranty concerning suitability for a specific customer application or use. This Information is intended for use only by customers who have the requisite experience and capability to determine the correct products for their application. Any technical advice inferred from this Information or otherwise provided by us with reference to the use of our products is given gratis, and we assume no obligation or liability for the advice given or results obtained.



© 2006 - 2025 YAGEO