CWR09NC475KB

Aliases (T409H475K050BC)

T409 CWR09, Tantalum, MnO2 Tantalum, Military/High Reliability, 4.7 uF, 10%, 50 VDC, SMD, MnO2, Molded, Military Equivalent, B (0.1%/1000 Hrs), 1.5 Ohms, 3.17 mm, 1.27 mm, 2815 / 7238

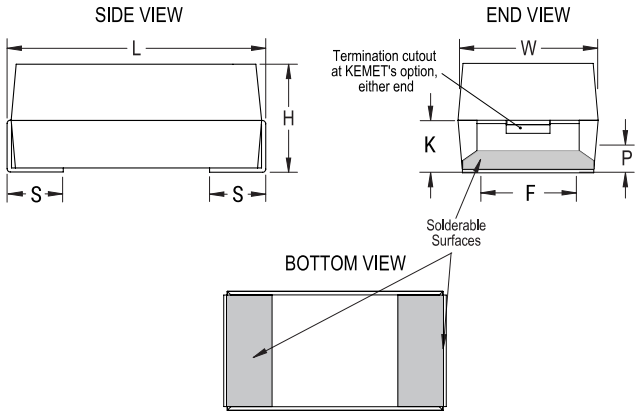

Click here for the 3D model.

General Information	
Series	T409 CWR09
Dielectric	MnO2 Tantalum
Style	SMD Chip
Description	SMD, MnO2, Molded, Military Equivalent
RoHS	No
Prop 65	**WARNING:** Cancer and reproductive harm - https://www.p65warnings.ca.gov/ .
SCIP Number	652b281f-d242-4453-bc44-0655d646cec3
Termination	Hot Solder Dipped
Qualifications	MIL-PRF-55365/4, CWR09 Style
AEC-Q200	No
Typical Component Weight	349.01 mg
Notes	Note: When Option C Is Selected For Lead Material, Add An Additional 0.38mm To The Tolerances For "L", "W", "H", "K" ,"F" And "S".
MSL	1

Dimensions	
L	7.24mm +/-0.38mm
W	3.81mm +/-0.38mm
H	2.79mm +/-0.38mm
S	1.27mm +0.25/-0.13mm
F	3.68mm +0.13/-0.51mm
K	1.52mm MIN
P	0.76mm MIN

Packaging Specifications	
Packaging	T&R, 178mm
Packaging Quantity	500

Specifications	
Capacitance	4.7 uF
Tolerance	10%
Voltage DC	50 VDC (85C), 33.5 VDC (125C)
Temperature Range	-55/+125°C
Rated Temperature	85°C
Dissipation Factor	6% 120Hz 25C
Failure Rate	B (0.1%/1000 Hrs)
ESR	1.5 Ohms (100kHz 25C)
Ripple Current	316 mA (rms, 100kHz 25C)
Leakage Current	3 uA (5min 25°C)
Testing and Reliability	Standard Testing Only

Statements of suitability for certain applications are based on our knowledge of typical operating conditions for such applications, but are not intended to constitute - and we specifically disclaim - any warranty concerning suitability for a specific customer application or use. This Information is intended for use only by customers who have the requisite experience and capability to determine the correct products for their application. Any technical advice inferred from this Information or otherwise provided by us with reference to the use of our products is given gratis, and we assume no obligation or liability for the advice given or results obtained.

© 2006 - 2025 YAGEO