ESD-FPD-40

Aliases (UECESDFPD40000)

EMI Suppression, KEMET, ESD-FPD, Flat - Split, Noise Suppression

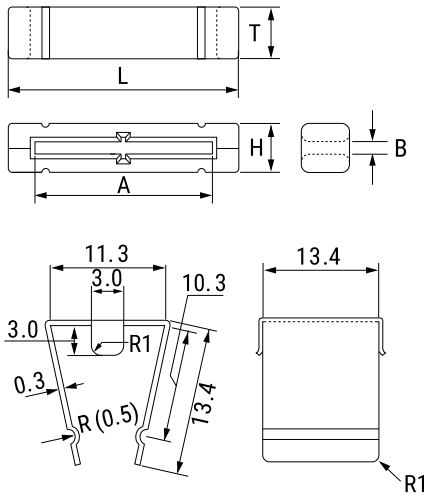

Click here for the 3D model.

General Information	
Series	ESD-FPD
Style	Flat - Split
Cable Type	Flat Cable
Description	EMI Core Split, For Flat Cables With Metal Clamp
Features	Stainless Steel Clamp
RoHS	Yes
Applicable Cable	40 Core
Materials	Ni-Zn
Core	Ni-Zn Ferrite

Dimensions	
L	68mm +/-1mm
T	12.7mm +/-1mm
H	10mm +/-2mm
A	56mm +/-1mm
B	2.6mm +/-1mm

Specifications	
Temperature Range	-25/+85°C
Effective Frequency	500 MHz (FM Band Range)

Packaging Specifications	
Packaging	Tray, Box
Packaging Quantity	240
Typical Component Weight	37.08 g

Statements of suitability for certain applications are based on our knowledge of typical operating conditions for such applications, but are not intended to constitute - and we specifically disclaim - any warranty concerning suitability for a specific customer application or use. This Information is intended for use only by customers who have the requisite experience and capability to determine the correct products for their application. Any technical advice inferred from this Information or otherwise provided by us with reference to the use of our products is given gratis, and we assume no obligation or liability for the advice given or results obtained.

© 2006 - 2026 YAGEO