# ALA7DA681DF450

ALA7D, Aluminum, Aluminum Electrolytic, 680 uF, 20%, 450 VDC, -40/+85°C, 10 mm

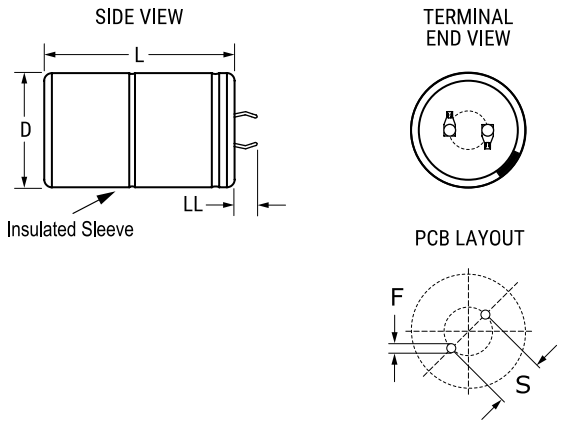


Click here for the 3D model.

| General Information | |
|---|---|
| Series | ALA7D |
| Dielectric | Aluminum Electrolytic |
| Description | Snap-In, Aluminum Electrolytic |
| RoHS | Yes |
| Lead | 2 Pin |
| Qualifications | AEC-Q200 |
| AEC-Q200 | Yes |
| Halogen Free | Yes |
| Typical Component Weight | 80 g |
| Miscellaneous | Vibration: <= 35mm 1.5mm displacement amplitude or 20G maximum acceleration. Vibration applied for three directions of 4-hour sessions at 10 – 2,000 Hz. (Capacitor clamped by body.). |
| Shelf Life | 156 Weeks |

| Dimensions | |
|---|---|
| D | 35mm +1mm |
| L | 50mm +/-2mm |
| S | 10mm +/-0.1mm |
| LL | 6.3mm +/-1mm |
| F | 2mm +/-0.1mm |

| Packaging Specifications | |
|---|---|
| Packaging | Tray |
| Packaging Quantity | 100 |

| Specifications | |
|---|---|
| Capacitance | 680 uF |
| Tolerance | 20% |
| Voltage DC | 450 VDC, 495 VDC (Surge) |
| Temperature Range | -40/+85°C |
| Rated Temperature | 85°C |
| Life | 15000 Hrs (Rated Voltage And Ripple Current At 85C), 24000 Hrs (Rated Voltage At 85C) |
| ESR | 227.8 mOhms (100Hz 20C), 135.4 mOhms (10kHz 20C) |
| Ripple Current | 3.06 Amps (100Hz 85C), 6.49 Amps (10kHz 85C) |
| Leakage Current | 1836 uA (5min 20°C) |

Statements of suitability for certain applications are based on our knowledge of typical operating conditions for such applications, but are not intended to constitute - and we specifically disclaim - any warranty concerning suitability for a specific customer application or use. This Information is intended for use only by customers who have the requisite experience and capability to determine the correct products for their application. Any technical advice inferred from this Information or otherwise provided by us with reference to the use of our products is given gratis, and we assume no obligation or liability for the advice given or results obtained.



© 2006 - 2025 YAGEO