ALS80A103DB063

ALS80, Aluminum, Aluminum Electrolytic, 10,000 uF, 20%, 63 VDC, -40/+105°C, 12.8 mm

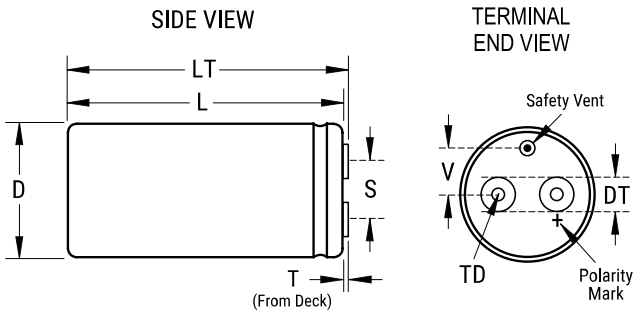

Click here for the 3D model.

General Information	
Series	ALS80
Dielectric	Aluminum Electrolytic
Description	Screw Terminal, Aluminum Electrolytic
RoHS	Yes
Lead	Screw Terminals M5
Mounting	Through-Hole
AEC-Q200	No
Halogen Free	Yes
Typical Component Weight	90 g
Notes	Dimensions D And L Include Sleeving. MS (MxH) = M8x12. Mounting Clamp (Sold Separately): V3/H2/2736
Shelf Life	156 Weeks

Dimensions	
D	36mm +/-1mm
L	62mm +/-2mm
T	7.1mm +/-0.5mm
S	12.8mm +/-0.5mm
DT	8mm +/-0.5mm
LT	67.5mm +/-1mm
TD	10mm MIN
V	8mm NOM

Packaging Specifications	
Sleeving	Yes
Packaging	Tray

Specifications	
Capacitance	10,000 uF
Tolerance	20%
Voltage DC	63 VDC, 72.5 VDC (Surge)
Temperature Range	-40/+105°C
Rated Temperature	105°C
Life	6000 Hrs (Rated Voltage And Ripple Current At 105C), 10000 Hrs (Rated Voltage at 105C)
ESR	43 mOhms (100Hz 20C), 34 mOhms (10kHz 20C)
Ripple Current	8.2 Amps (100Hz 105C), 11.7 Amps (10 kHz 105C)
Leakage Current	1890 uA

Statements of suitability for certain applications are based on our knowledge of typical operating conditions for such applications, but are not intended to constitute - and we specifically disclaim - any warranty concerning suitability for a specific customer application or use. This Information is intended for use only by customers who have the requisite experience and capability to determine the correct products for their application. Any technical advice inferred from this Information or otherwise provided by us with reference to the use of our products is given gratis, and we assume no obligation or liability for the advice given or results obtained.

© 2006 - 2026 YAGEO