EDK106M100A9HAA

EDK, Aluminum, Aluminum Electrolytic, 10 uF, 20%, 100 VDC, -40/+85°C

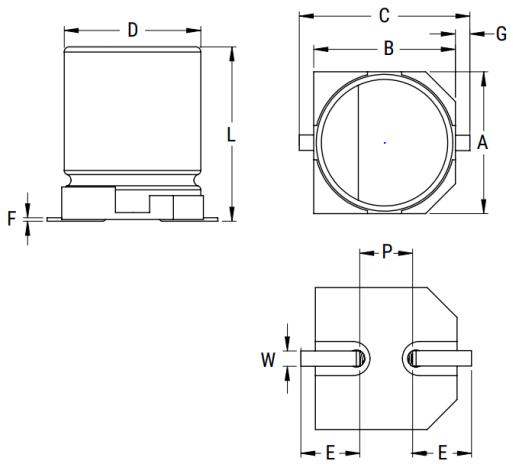

Click here for the 3D model.

General Information	
Series	EDK
Dielectric	Aluminum Electrolytic
Style	SMD Can
Description	Surface Mount, Aluminum Electrolytic
RoHS	Yes
Lead	V-Chip
AEC-Q200	No

Dimensions	
D	6.3mm +/-0.5mm
L	7.7mm +/-0.3mm
W	0.65mm +/-0.1mm
F	0.3mm MAX
A	6.6mm +/-0.2mm
B	6.6mm +/-0.2mm
C	7.8mm MAX
E	2.4mm +/-0.2mm
G	0.35mm +0.15/-0.2mm
P	2.1mm +/-0.2mm

Packaging Specifications	
Packaging	T&R, 380mm

Specifications	
Capacitance	10 uF
Tolerance	20%
Voltage DC	100 VDC, 125 VDC (Surge)
Temperature Range	-40/+85°C
Rated Temperature	85°C
Life	2000 Hrs
Dissipation Factor	18%
Ripple Current	50 mAmps (120Hz 85C), 68 mAmps (120Hz 50C)
High Temperature Solder	Yes
Leakage Current	10 uA (2min 20°C)
Impedance Ratio at -25C	2
Impedance Ratio at -40C	3

Statements of suitability for certain applications are based on our knowledge of typical operating conditions for such applications, but are not intended to constitute - and we specifically disclaim - any warranty concerning suitability for a specific customer application or use. This Information is intended for use only by customers who have the requisite experience and capability to determine the correct products for their application. Any technical advice inferred from this Information or otherwise provided by us with reference to the use of our products is given gratis, and we assume no obligation or liability for the advice given or results obtained.

© 2006 - 2025 YAGEO