ALF20G223EH063

ALF20, Aluminum, Aluminum Electrolytic, 22,000 uF, 20%, 63 VDC, -40/+85°C, 25 mm

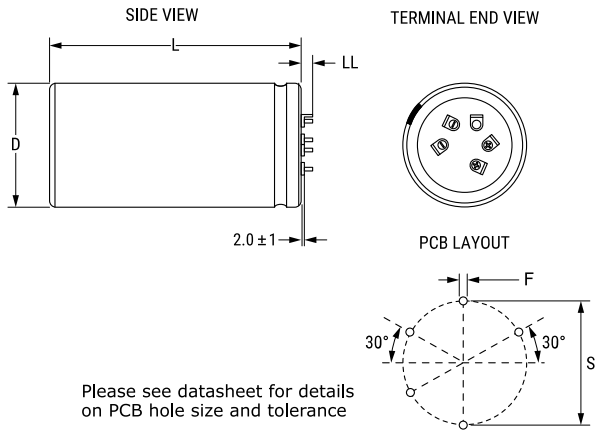

Click here for the 3D model.

General Information	
Series	ALF20
Dielectric	Aluminum Electrolytic
Style	Press-Fit
Description	Aluminum Electrolytic
RoHS	Yes
Lead	5 Pin Press-Fit
AEC-Q200	No
Typical Component Weight	98 g
Notes	Dimensions Include Sleeving.
Shelf Life	156 Weeks

Dimensions	
D	40mm +1mm
L	60mm +/-2mm
S	25mm +/-0.1mm
LL	5.5mm +/-1mm
F	1.486mm +/-0.076mm

Packaging Specifications	
Packaging	Bulk
Packaging Quantity	36

Specifications	
Capacitance	22,000 uF
Tolerance	20%
Voltage DC	63 VDC, 72.5 VDC (Surge)
Temperature Range	-40/+85°C
Rated Temperature	85°C
Life	18000 Hrs (Rated Voltage And Ripple Current At 85C), 29000 Hrs (Rated Voltage At 85C)
ESR	26 mOhms (100Hz 20C), 22 mOhms (10kHz 20C)
Ripple Current	9.84 Amps (100Hz 85C), 11.34 Amps (10kHz 85C)
Leakage Current	6000 uA (5min 20°C)

Statements of suitability for certain applications are based on our knowledge of typical operating conditions for such applications, but are not intended to constitute - and we specifically disclaim - any warranty concerning suitability for a specific customer application or use. This Information is intended for use only by customers who have the requisite experience and capability to determine the correct products for their application. Any technical advice inferred from this Information or otherwise provided by us with reference to the use of our products is given gratis, and we assume no obligation or liability for the advice given or results obtained.

© 2006 - 2025 YAGEO