CWR11KH106KC

Aliases (T492D106K025CH, T492D106K025CS)

T492 CWR11, Tantalum, MnO2 Tantalum, Military/High Reliability, 10 uF, 10%, 25 VDC, SMD, MnO2, Molded, Military Equivalent, C (0.01%/1000 Hrs), 1.2 Ohms, 3.1 mm, 1.3 mm, 2817 / 7343

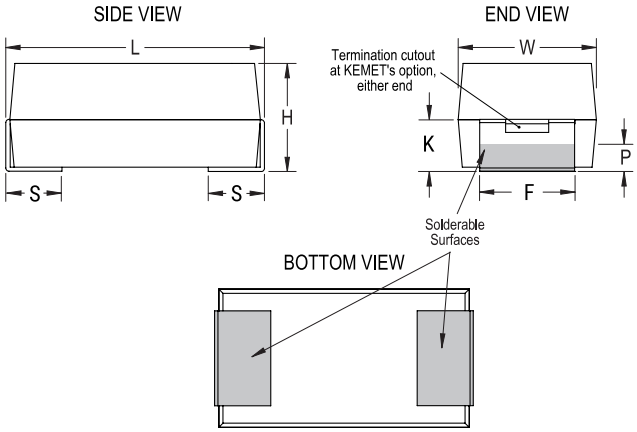

Click here for the 3D model.

General Information	
Series	T492 CWR11
Dielectric	MnO2 Tantalum
Style	SMD Chip
Description	SMD, MnO2, Molded, Military Equivalent
RoHS	No
Prop 65	**WARNING:** Cancer and reproductive harm - https://www.p65warnings.ca.gov/ .
SCIP Number	1dd2e1b8-26dd-4d52-927c-6f9d519011aa
Termination	Tin Lead (SnPb)
Qualifications	MIL-PRF-55365/8, CWR11 Style
AEC-Q200	No
Typical Component Weight	412.33 mg
Notes	Note: When Option C Is Selected For Lead Material, Add An Additional 0.38mm To The Tolerances For "L", "W", "H", "K" ,"F" And "S".
MSL	1

Dimensions	
L	7.3mm +/-0.3mm
W	4.3mm +/-0.3mm
H	2.8mm +/-0.3mm
T	0.13mm REF
S	1.3mm +/-0.3mm
F	2.4mm +/-0.1mm
B	0.5mm +/-0.15mm
E	3.5mm REF
G	3.5mm REF
K	1mm MIN
P	0.5mm MIN
R	1mm REF
X	0.1mm +/-0.1mm REF

Specifications	
Capacitance	10 uF
Tolerance	10%
Voltage DC	25 VDC (85C), 16.75 VDC (125C)
Temperature Range	-55/+125°C
Rated Temperature	85°C
Dissipation Factor	6% 120Hz 25C
Failure Rate	C (0.01%/1000 Hrs)
ESR	1.2 Ohms (100kHz 25C)
Ripple Current	354 mA (rms, 100kHz 25C)
Leakage Current	2.5 uA (5min 25°C)
Testing and Reliability	Standard Testing Only

Packaging Specifications	
Packaging	T&R, 178mm
Packaging Quantity	500

Statements of suitability for certain applications are based on our knowledge of typical operating conditions for such applications, but are not intended to constitute - and we specifically disclaim - any warranty concerning suitability for a specific customer application or use. This Information is intended for use only by customers who have the requisite experience and capability to determine the correct products for their application. Any technical advice inferred from this Information or otherwise provided by us with reference to the use of our products is given gratis, and we assume no obligation or liability for the advice given or results obtained.

© 2006 - 2025 YAGEO