# ALS71H203QT400

ALS71, Aluminum, Aluminum Electrolytic, 20,000 uF, 20%, 400 VDC, -40/+85°C, 31.8 mm

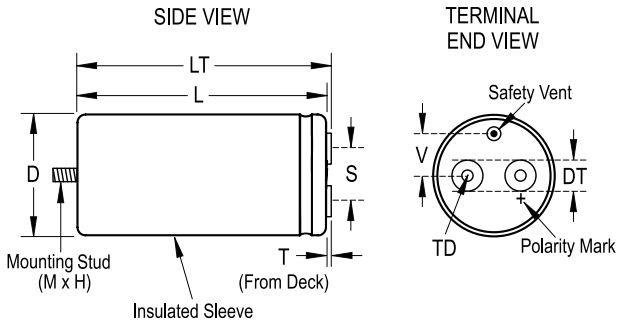


Click here for the 3D model.

| General Information | |
|---|---|
| Series | ALS71 |
| Dielectric | Aluminum Electrolytic |
| Description | Screw Terminal, Aluminum Electrolytic |
| RoHS | Yes |
| Lead | ThreadedInserts - 10-32 UNF class 2B |
| Mounting | Through-Hole |
| Optional Mounting | Stud |
| AEC-Q200 | No |
| Halogen Free | Yes |
| Typical Component Weight | 2,000 g |
| Notes | Dimensions D And L Include Sleeving. MS (MxH) = M12x16. Mounting Clamp (Sold Separately): V90N |
| Shelf Life | 156 Weeks |

| Dimensions | |
|---|---|
| D | 90mm +/-1mm |
| L | 220mm +/-2mm |
| T | 7.1mm +/-0.5mm |
| S | 31.8mm +/-0.5mm |
| DT | 8mm +/-0.5mm |
| LT | Available On Request |
| TD | 10mm MIN |
| V | 25mm NOM |

| Packaging Specifications | |
|---|---|
| Sleeving | Yes |
| Packaging | Tray |

| Specifications | |
|---|---|
| Capacitance | 20,000 uF |
| Tolerance | 20% |
| Voltage DC | 400 VDC, 440 VDC (Surge) |
| Temperature Range | -40/+85°C |
| Rated Temperature | 85°C |
| Life | 20000 Hrs (Rated Voltage And Ripple Current At 85C), 40000 Hrs (Rated Voltage at 85C) |
| ESR | 12 mOhms (100Hz 20C), 9 mOhms (10kHz 20C) |
| Ripple Current | 29.1 Amps (100Hz 85C), 37.9 Amps (10kHz 85C) |
| Leakage Current | 6000 uA |

Statements of suitability for certain applications are based on our knowledge of typical operating conditions for such applications, but are not intended to constitute - and we specifically disclaim - any warranty concerning suitability for a specific customer application or use. This Information is intended for use only by customers who have the requisite experience and capability to determine the correct products for their application. Any technical advice inferred from this Information or otherwise provided by us with reference to the use of our products is given gratis, and we assume no obligation or liability for the advice given or results obtained.



© 2006 - 2025 YAGEO