T110A105K050AS

T110, Tantalum, MnO2 Tantalum, Commercial Grade, 1 uF, 10%, 50 VDC

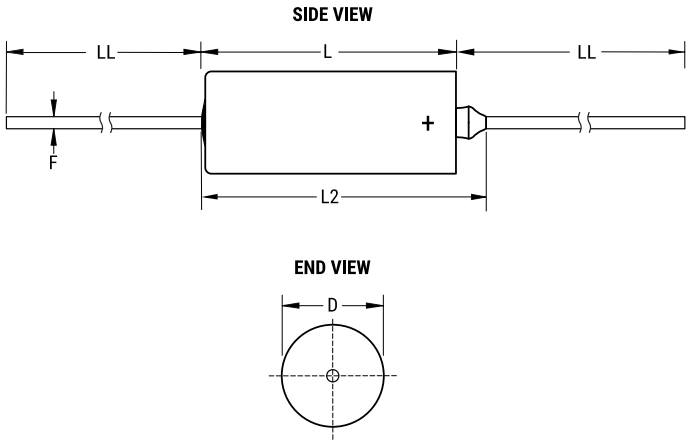

Click here for the 3D model.

General Information	
Series	T110
Dielectric	MnO2 Tantalum
Style	Axial Hermetic
Description	Axial, Solid Tantalum, Hermetically Sealed, Military (Non-ER), Polar
Features	Polar
RoHS	No
Prop 65	**WARNING:** Cancer and reproductive harm - https://www.p65warnings.ca.gov/ .
SCIP Number	be146961-2c72-4b45-804a-c62bf7a8b23e
Termination	Lead (SnPb)
Lead	Wire Leads
AEC-Q200	No
Construction	Hermetic
Notes	Dimensions Include Insulation Sleeve. When Supplied On T&R Or Ammo, Lead Length Is Determined By Taping Specification.

Dimensions	
D	3.43mm +/-0.25mm
L	7.26mm +/-0.79mm
L2	10.72mm
LL	38.1mm +/-6.35mm
F	0.51mm +/-0.05mm

Packaging Specifications	
Packaging	Bulk, Box
Packaging Quantity	150

Specifications	
Capacitance	1 uF
Tolerance	10%
Voltage DC	50 VDC (85C), 40 VDC (125C Surge), 0.5 VDC (125C Reverse)
Temperature Range	-55/+125°C
Rated Temperature	85°C
Dissipation Factor	2%
Leakage Current	0.3 uA (25°C)

Statements of suitability for certain applications are based on our knowledge of typical operating conditions for such applications, but are not intended to constitute - and we specifically disclaim - any warranty concerning suitability for a specific customer application or use. This Information is intended for use only by customers who have the requisite experience and capability to determine the correct products for their application. Any technical advice inferred from this Information or otherwise provided by us with reference to the use of our products is given gratis, and we assume no obligation or liability for the advice given or results obtained.

© 2006 - 2026 YAGEO