T493X157K016BH6420

T493 HRA, Tantalum, MnO2 Tantalum, HRA, 150 uF, 10%, 16 VDC, SMD, MnO2, Molded, High Reliability, B (0.1%/1000 Hrs), 150 mOhms, 4.3 mm, 1.3 mm, 2817 / 7343

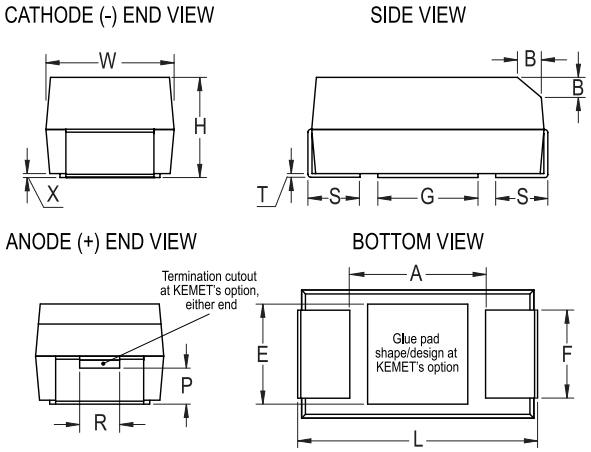

Click here for the 3D model.

General Information	
Series	T493 HRA
Dielectric	MnO2 Tantalum
Style	SMD Chip
Description	SMD, MnO2, Molded, High Reliability
Features	High Reliability
RoHS	No
Prop 65	**WARNING:** Cancer and reproductive harm - https://www.p65warnings.ca.gov/ .
SCIP Number	1dd2e1b8-26dd-4d52-927c-6f9d519011aa
Termination	Tin Lead (SnPb)
AEC-Q200	No
Typical Component Weight	654.04 mg

Dimensions	
L	7.3mm +/-0.3mm
W	4.3mm +/-0.3mm
H	4mm +/-0.3mm
T	0.13mm REF
S	1.3mm +/-0.3mm
F	2.4mm +/-0.1mm
A	3.8mm MIN
B	0.5mm +/-0.15mm
E	3.5mm REF
G	3.5mm REF
P	1.7mm REF
R	1mm REF
X	0.1mm +/-0.1mm REF

Specifications	
Capacitance	150 uF
Tolerance	10%
Voltage DC	16 VDC (85C), 10.72 VDC (125C)
Temperature Range	-55/+125°C
Rated Temperature	85°C
Dissipation Factor	8% 120Hz 25C
Failure Rate	B (0.1%/1000 Hrs)
ESR	0.15 Ohms (100kHz 25C)
Ripple Current	908 mA (rms, 100kHz 25C)
Leakage Current	24 uA (5min 25°C)
Testing and Reliability	10 Cycles Surge Current Testing At -55C And +85C Before Weibull

Packaging Specifications	
Packaging	T&R, 178mm
Packaging Quantity	500

Statements of suitability for certain applications are based on our knowledge of typical operating conditions for such applications, but are not intended to constitute - and we specifically disclaim - any warranty concerning suitability for a specific customer application or use. This Information is intended for use only by customers who have the requisite experience and capability to determine the correct products for their application. Any technical advice inferred from this Information or otherwise provided by us with reference to the use of our products is given gratis, and we assume no obligation or liability for the advice given or results obtained.

© 2006 - 2025 YAGEO