# EDH226M100S9MAA

EDH, Aluminum, Aluminum Electrolytic, 22 uF, 20%, 100 VDC, -40/+105°C

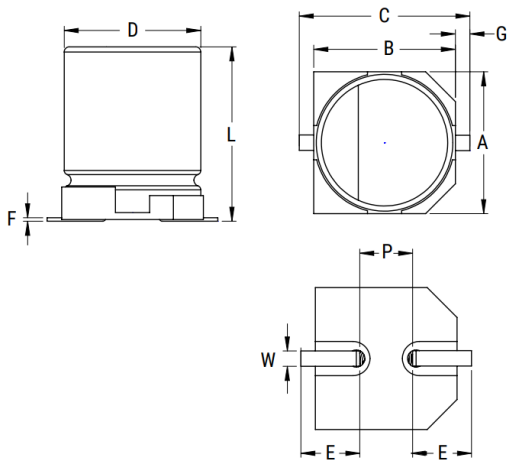


Click here for the 3D model.

| General Information | |
|---|---|
| Series | EDH |
| Dielectric | Aluminum Electrolytic |
| Style | SMD Can |
| Description | Surface Mount, Aluminum Electrolytic |
| RoHS | Yes |
| Lead | V-Chip |
| Qualifications | AEC-Q200 |
| AEC-Q200 | Yes |

| Dimensions | |
|---|---|
| D | 8mm +/-0.5mm |
| L | 10.2mm +/-0.3mm |
| W | 0.9mm +/-0.2mm |
| F | 0.3mm MAX |
| A | 8.3mm +/-0.2mm |
| B | 8.3mm +/-0.2mm |
| C | 10mm MAX |
| E | 2.9mm +/-0.2mm |
| G | 0.7mm +/-0.2mm |
| P | 3.1mm +/-0.2mm |

| Packaging Specifications | |
|---|---|
| Packaging | T&R |

| Specifications | |
|---|---|
| Capacitance | 22 uF |
| Tolerance | 20% |
| Voltage DC | 100 VDC, 125 VDC (Surge) |
| Temperature Range | -40/+105°C |
| Rated Temperature | 105°C |
| Life | 2000 Hrs |
| Dissipation Factor | 18% 120Hz 20C |
| Ripple Current | 100 mAmps (120Hz 105C) |
| Compare Ripple Current at 120Hz | 0.1 |
| High Temperature Solder | Yes |
| Leakage Current | 22 uA (2min 20°C) |
| Impedance Ratio at -25C | 2 |
| Impedance Ratio at -40C | 3 |

Statements of suitability for certain applications are based on our knowledge of typical operating conditions for such applications, but are not intended to constitute - and we specifically disclaim - any warranty concerning suitability for a specific customer application or use. This Information is intended for use only by customers who have the requisite experience and capability to determine the correct products for their application. Any technical advice inferred from this Information or otherwise provided by us with reference to the use of our products is given gratis, and we assume no obligation or liability for the advice given or results obtained.



© 2006 - 2025 YAGEO