EDH476M063A9MAA

EDH, Aluminum, Aluminum Electrolytic, 47 uF, 20%, 63 VDC, -40/+105°C

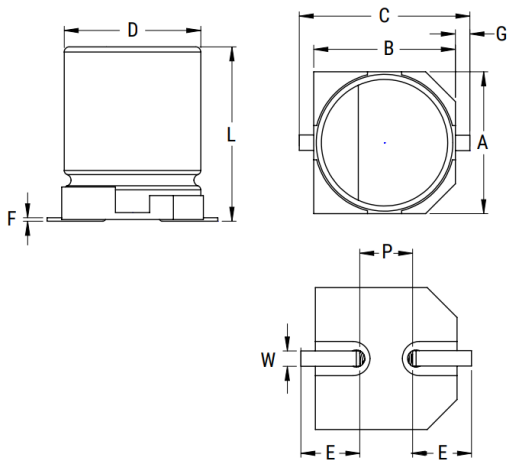

Click here for the 3D model.

General Information	
Series	EDH
Dielectric	Aluminum Electrolytic
Style	SMD Can
Description	Surface Mount, Aluminum Electrolytic
RoHS	Yes
Lead	V-Chip
AEC-Q200	No

Dimensions	
D	8mm +/-0.5mm
L	10.2mm +/-0.3mm
W	0.9mm +/-0.2mm
F	0.3mm MAX
A	8.3mm +/-0.2mm
B	8.3mm +/-0.2mm
C	10mm MAX
E	2.9mm +/-0.2mm
G	0.7mm +/-0.2mm
P	3.1mm +/-0.2mm

Packaging Specifications	
Packaging	T&R

Specifications	
Capacitance	47 uF
Tolerance	20%
Voltage DC	63 VDC, 79 VDC (Surge)
Temperature Range	-40/+105°C
Rated Temperature	105°C
Life	2000 Hrs
Dissipation Factor	18% 120Hz 20C
Ripple Current	170 mAmps (120Hz 105C)
Compare Ripple Current at 120Hz	0.17
High Temperature Solder	Yes
Leakage Current	29.61 uA (2min 20°C)
Impedance Ratio at -25C	2
Impedance Ratio at -40C	3

Statements of suitability for certain applications are based on our knowledge of typical operating conditions for such applications, but are not intended to constitute - and we specifically disclaim - any warranty concerning suitability for a specific customer application or use. This Information is intended for use only by customers who have the requisite experience and capability to determine the correct products for their application. Any technical advice inferred from this Information or otherwise provided by us with reference to the use of our products is given gratis, and we assume no obligation or liability for the advice given or results obtained.

© 2006 - 2025 YAGEO