M39003/01-2526

Aliases (T212B106K020PS, CSR13E106KP)

T212 CSR13, Tantalum, MnO2 Tantalum, Military/High Reliability, 10 uF, 10%, 20 VDC, 2.9 Ohms

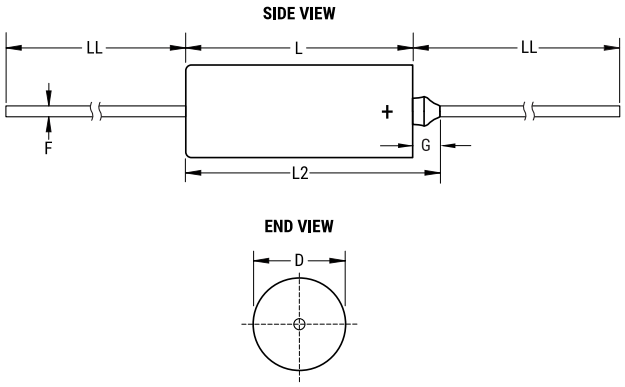

Click here for the 3D model.

General Information	
Series	T212 CSR13
Dielectric	MnO2 Tantalum
Style	Axial Hermetic
Description	Axial, Solid Tantalum, Hermetically Sealed, Military, CSR13 Style
Features	Low Leakage
RoHS	No
Prop 65	**WARNING:** Cancer and reproductive harm - https://www.p65warnings.ca.gov/ .
SCIP Number	bee1eed4-5fec-4214-9f43-620c5b22071f
Termination	Lead (SnPb)
Lead	Wire Leads
Qualifications	MIL-PRF-39003, CSR13 Style
AEC-Q200	No
Construction	Hermetic
Notes	Dimensions Include Insulating Sleeve. Lead Length Shown Is For Parts Supplied With Bulk Packaging, When Supplied On T&R Or Ammo, Lead Length Is Determined By Taping Specification.

Dimensions	
D	4.7mm +/-0.25mm
L	12.04mm +/-0.79mm
L2	15.49mm
LL	38.1mm +/-6.35mm
F	0.51mm +/-0.05mm
G	3.45mm +0.79mm

Packaging Specifications	
Packaging	Bulk, Box
Packaging Quantity	75

Specifications	
Capacitance	10 uF
Tolerance	10%
Voltage DC	20 VDC (85C), 16 VDC (125C Surge), 0.2 VDC (125C Reverse)
Temperature Range	-55/+125°C
Dissipation Factor	6%
Failure Rate	P (0.1%/1000 Hrs)
ESR	2.9 Ohms (100kHz)
Ripple Current	186 mAmps (100kHz)
Leakage Current	1 uA
Testing and Reliability	Standard Testing To MIL-PRF-39003

Statements of suitability for certain applications are based on our knowledge of typical operating conditions for such applications, but are not intended to constitute - and we specifically disclaim - any warranty concerning suitability for a specific customer application or use. This Information is intended for use only by customers who have the requisite experience and capability to determine the correct products for their application. Any technical advice inferred from this Information or otherwise provided by us with reference to the use of our products is given gratis, and we assume no obligation or liability for the advice given or results obtained.

© 2006 - 2026 YAGEO