# EXV227M025A9MAA

EXV, Aluminum, Aluminum Electrolytic, 220 uF, 20%, 25 VDC, -55/+105°C

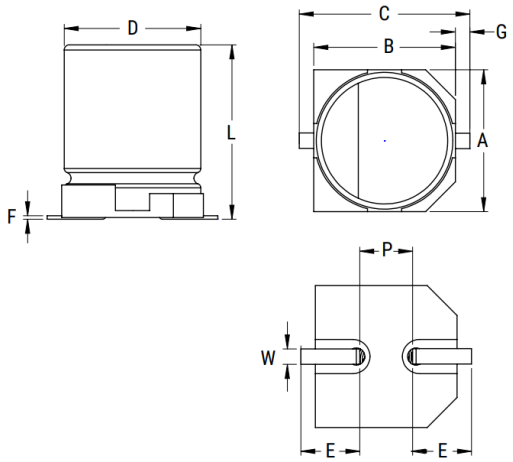


Click here for the 3D model.

| General Information | |
|---|---|
| Series | EXV |
| Dielectric | Aluminum Electrolytic |
| Style | SMD Can |
| Description | Surface Mount, Aluminum Electrolytic |
| RoHS | Yes |
| Lead | V-Chip |
| AEC-Q200 | No |

| Dimensions | |
|---|---|
| D | 8mm +/-0.5mm |
| L | 10.2mm +/-0.3mm |
| W | 0.9mm +/-0.2mm |
| F | 0.3mm MAX |
| A | 8.3mm +/-0.2mm |
| B | 8.3mm +/-0.2mm |
| C | 10mm MAX |
| E | 2.9mm +/-0.2mm |
| G | 0.7mm +/-0.2mm |
| P | 3.1mm +/-0.2mm |

| Packaging Specifications | |
|---|---|
| Packaging | T&R, 380mm |

| Specifications | |
|---|---|
| Capacitance | 220 uF |
| Tolerance | 20% |
| Voltage DC | 25 VDC, 32 VDC (Surge) |
| Temperature Range | -55/+105°C |
| Rated Temperature | 105°C |
| Life | 5000 Hrs |
| Dissipation Factor | 14% |
| ESR | 0.16 Ohms (100kHz 20C) |
| ESR | 160 mOhms |
| Ripple Current | 600 mAmps (100kHz 105C), 420 mAmps (120Hz 85C) |
| Compare Ripple Current at 120Hz | 0.42 |
| High Temperature Solder | Yes |
| Leakage Current | 55 uA (2min 20°C) |
| Impedance Ratio at -25C | 2 |
| Impedance Ratio at -40C | 3 |

Statements of suitability for certain applications are based on our knowledge of typical operating conditions for such applications, but are not intended to constitute - and we specifically disclaim - any warranty concerning suitability for a specific customer application or use. This Information is intended for use only by customers who have the requisite experience and capability to determine the correct products for their application. Any technical advice inferred from this Information or otherwise provided by us with reference to the use of our products is given gratis, and we assume no obligation or liability for the advice given or results obtained.



© 2006 - 2025 YAGEO