C430C473K1H5TA91707200

AxiMax 400 Auto X8R HT150C, Ceramic, 0.047 uF, 10%, 100 VDC, X8R, AxiMax, Automotive Grade

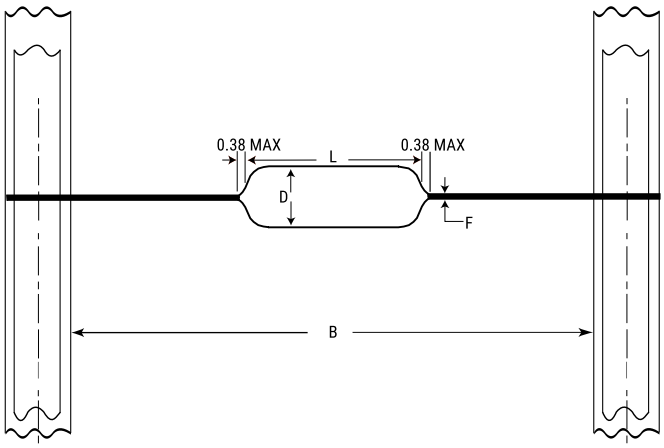

Click here for the 3D model.

General Information	
Series	AxiMax 400 Auto X8R HT150C
Description	AxiMax, Automotive Grade
Features	Automotive Grade
RoHS	Yes
Termination	Tin
Lead	Wire Leads
Failure Rate	N/A
Qualifications	AEC-Q200
AEC-Q200	Yes
Halogen Free	Yes

Dimensions	
D	3.81mm MAX
L	6.1mm MAX
F	0.51mm +0.025/-0.076mm
B	52.4mm +/-1.5mm

Packaging Specifications	
Packaging	T&R, 305mm
Packaging Quantity	2500

Specifications	
Capacitance	0.047 uF
Measurement Condition	1 kHz 1.0Vrms
Tolerance	10%
Voltage DC	100 VDC
Dielectric Withstanding Voltage	250 VDC
Temperature Range	-55/+150°C
Temp. Coefficient	X8R
Capacitance Change with Reference to +25°C and 0 VDC Applied (TCC)	0.15, 1kHz 1.0Vrms
Dissipation Factor	2.5% 1 kHz 1.0Vrms
Aging Rate	0% Loss/Decade Hour
Insulation Resistance	21.28 GOhms

Statements of suitability for certain applications are based on our knowledge of typical operating conditions for such applications, but are not intended to constitute - and we specifically disclaim - any warranty concerning suitability for a specific customer application or use. This Information is intended for use only by customers who have the requisite experience and capability to determine the correct products for their application. Any technical advice inferred from this Information or otherwise provided by us with reference to the use of our products is given gratis, and we assume no obligation or liability for the advice given or results obtained.

© 2006 - 2025 YAGEO