SMR5105J50J06L16.5CBULK

Aliases (F211JU105J050ALG5C)

SMR/F211, Film, Metallized PPS, General Purpose, 1 uF, 5%, 50 VDC, 125°C, 5 mm

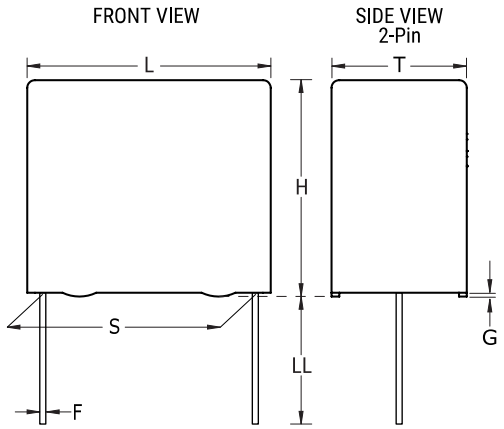

Click here for the 3D model.

General Information	
Series	SMR/F211
Dielectric	Metallized PPS
Style	Radial
Features	Audio Applications
RoHS	Yes
Termination	Tinned Wire
Lead	Wire Leads
AEC-Q200	No
Typical Component Weight	0.9 g
Miscellaneous	The rated voltage decreases 2%/C between +125C and +150C.
Notes	Case Size = JU.

Dimensions	
L	7.2mm -0.5mm
H	13mm -0.5mm
T	7.2mm -0.5mm
S	5mm +/-0.4mm
LL	16.5mm +0.5mm
F	0.5mm +/-0.05mm
G	0.5mm NOM

Packaging Specifications	
Packaging	Bulk, Bag
Packaging Quantity	1000

Specifications	
Capacitance	1 uF
Tolerance	5%
Voltage DC	50 VDC
Voltage AC	30 VAC
Temperature Range	-55/+150°C
Rated Temperature	125°C
Dissipation Factor	0.15% 1kHz, 0.25% 10kHz, 0.6% 100kHz
Insulation Resistance	5 GOhms
Max dV/dt	6 V/us

Statements of suitability for certain applications are based on our knowledge of typical operating conditions for such applications, but are not intended to constitute - and we specifically disclaim - any warranty concerning suitability for a specific customer application or use. This Information is intended for use only by customers who have the requisite experience and capability to determine the correct products for their application. Any technical advice inferred from this Information or otherwise provided by us with reference to the use of our products is given gratis, and we assume no obligation or liability for the advice given or results obtained.

© 2006 - 2025 YAGEO