Process Capable

RoHS Compliant 2011/65/EU

Compliant Halogen Free

REV.	ECN NO OR DESCRIPTION	REVISED	DATE

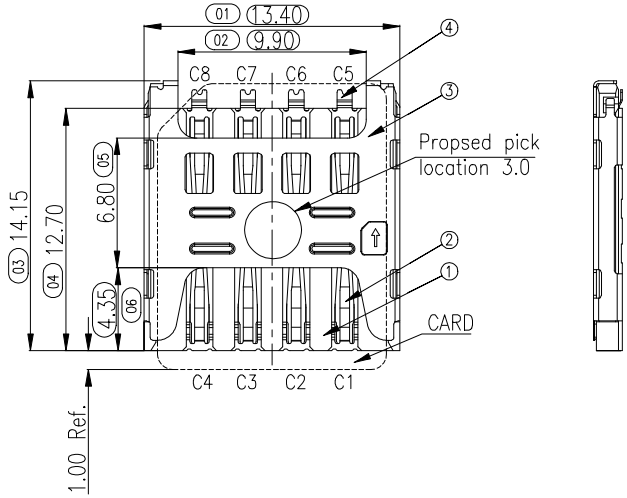

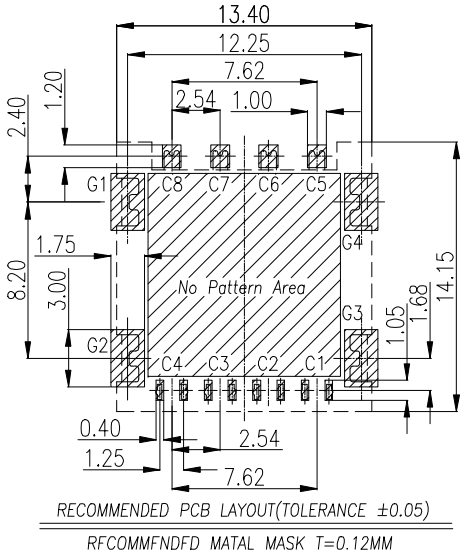

RECOMMENDED PCB LAYOUT(TOLERANCE ±0.05)

RFCOMMFNDFD MATAL MASK T=0.12MM

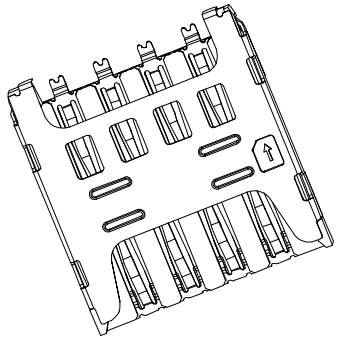

NOTES:
1. MATERIAL:SEE TABLE
2. SPECIALITY:
   - 2.1 Rated current:1.0A
   - 2.2 Rated voltage:30V
   - 2.3 Contact Resistance:50m? MAX
   - 2.4 Insulation Resistance:1000M? MIN 500V DC
   - 2.5 Dielectric withstanding voltage: 500V DC.
   - 2.6 Solder ability:250±5℃ 10±0.5s.
   - 2.7 Durability:3000 Cycles Min.Contact Resistance50m?Max
   - 2.8 Mating and Unmating force
     - Insertion Force 10N Max
     - Withdrawal Fore 10N Max
   - 2.9 Operating condition:Temperature-40℃~+85℃;
     Humidity 80% R.H MAX

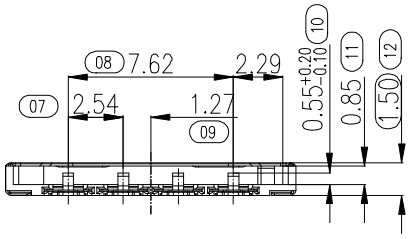

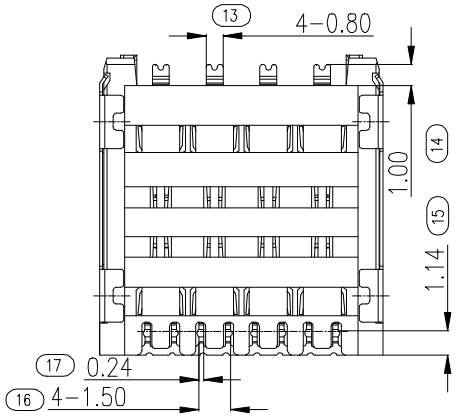

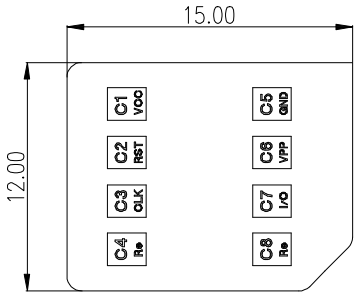

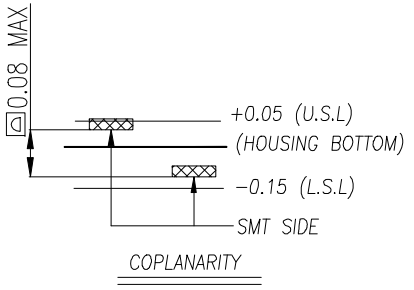

COPLANARITY

PIN No.	DESCRIPTION
C1	VCC (SUPPLY VOLTAGE)
C2	RST (RESET SIGNAL)
C3	CLK (CLOCK SIGNAL)
C4	RESERVED
C5	GND
C6	VPP (VARIABLE SUPPLY VLOTAGE)
C7	I/O (DATA INPUT/OUTPUT)
C8	RESERVED
G1~G4	GND

UNLESS OTHERWISE SPECIFED TOLERANCES

DECIMALS: ANGLES:

X :±0.38 X :±2°

X.X :±0.25 X.X :±1°

X.XX :±0.10

东莞市汉博电子科技有限公司
DONGGUAN HANBO TECHNOLOGY CO. , LTD

TITLE	MICRO SIM CONNECTOR 1.5H			
DWN	xiong	PART NO. SMO-1535		
CHKD	lee	SCALE:1:1	UNIT: mm	
APVD	wang	SIZE: A4	SHEET:1OF 1	REV: A4

CUSTOMER COPY

REV.	ECN NO OR DESCRIPTION	REVISED	DATE

Process Capable

RoHS Compliant 2011/65/EU

Compliant Halogen Free

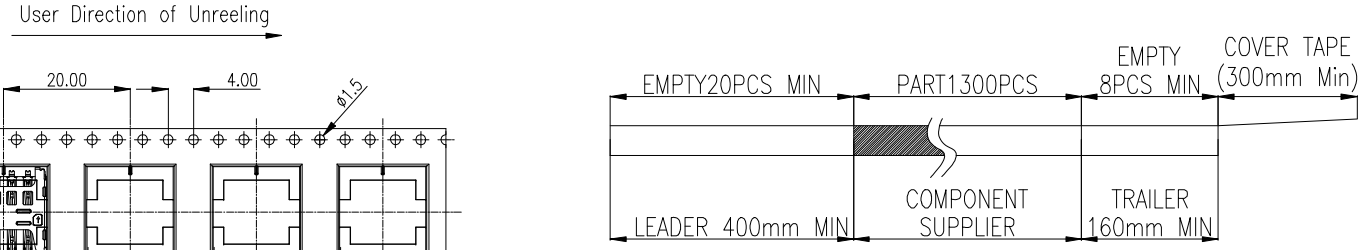

NOTES
1. NUMBER OF CONNECTORS:1300PCS/REEL
2. LEAD TAPE LENGTH
3. QUANTITY: 10400PCS/CARTON
4. WEIGHT :
   3.1 NET WEIGHT : 3.33Kg
   3.2 GROSS WEIGHT : 6.55Kg

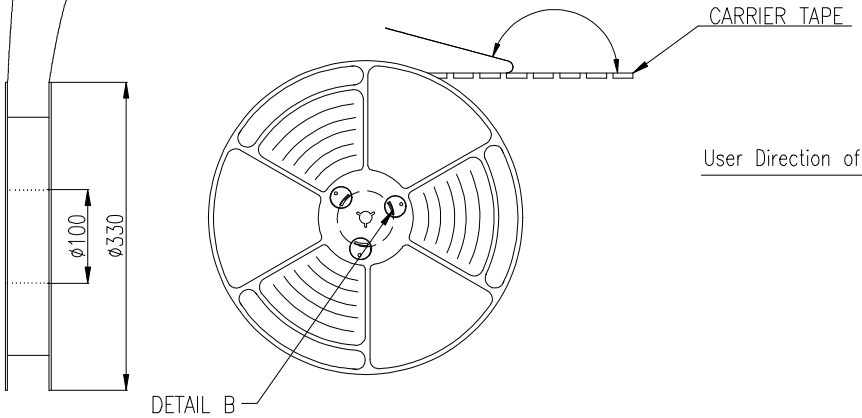

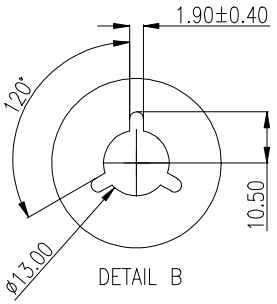

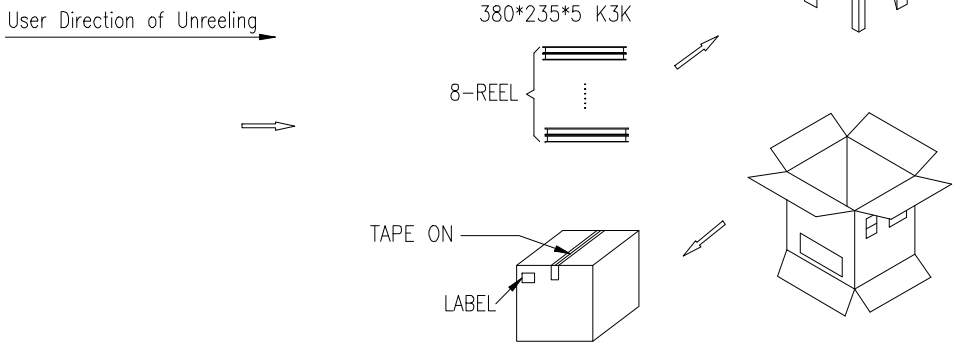

UNLESS OTHERWISE SPECIFED TOLERANCES	东莞市汉博电子科技有限公司 DONGGUAN HANBO TECHNOLOGY CO. , LTD			
DECIMALS: ANGLES:	TITLE	MICRO SIM CONNECTOR 1.5H		
X :±0.38 X :±2°	DWN	xiong	PART NO. SMO-1535	
X.X :±0.25 X.X :±1°	CHKD	lee	SCALE:1:1	UNIT: mm
X.XX :±0.10	APVD	wang	SIZE: A4	SHEET:1OF 1 REV: A4
	CUSTOMER COPY			