Technical Data
Data Sheet N2456, Rev.A

GF5045PC Power Schottky Module Bypass Diode

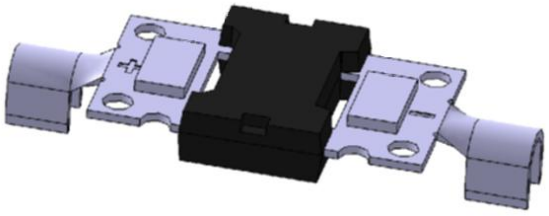

GFM

Features

- Schotty Barrier hight diode
- Low thermal resistance
- Lower forward voltage drop, low power loss
- Isolate Package design, ideal for heat dispersion
- High forward current capability
- Excellent anti-humidity
- Low profile package
- High forward surge capability
- Terminals: Tin plated
- All SMC parts are traceable to the wafer lot
- Additional electrical and life testing can be performed upon request

Mechanical Data

- Case: GFM
- Terminals: Copper
- High temperature soldering guaranteed
- Heated-tool welding 260℃,10seconds
- Marking Code: GF5045PC

Maximum Ratings(limiting values, at 25 °C unless otherwise specified)

Characteristics	Symbol	Condition	Max.	Units
Peak Repetitive Reverse Voltage Working Peak Reverse Voltage DC Blocking Voltage	V_{RRM} V_{RWM} V_R	-	45	V
Average Rectified Forward Current	$I_{F\ (AV)}$	Tc=105°C, In DC	50	A
Peak One Cycle Non-Repetitive Surge Current	I_{FSM}	8.3 ms, half Sine pulse	450	A

Electrical Characteristics:

Characteristics	Symbol	Condition	Typ.	Max.	Units
Forward Voltage Drop*	V_{F1}	@ 50A, Pulse, T_J = 25 °C	0.49	0.60	V
Reverse Current*	I_{R1}	@V_R = rated V_R T_J = 25 °C	0.20	1.0	mA
	I_{R2}	@V_R = rated V_R T_J = 125 °C	115	200	mA
Junction Capacitance	C_T	@V_R = 5V, T_C = 25 °C f_{SIG} = 1MHz	4546	-	pF

* Pulse width < 300 μs, duty cycle < 2%

Thermal-Mechanical Specifications:

Characteristics	Symbol	Condition	Specification	Units
Junction Temperature	T_J	IN DC Forward Mode, without reverse bias, t ≤1 h	-55 to +200	°C
Storage Temperature	T_{stg}	-	-55 to +150	°C
Typical Thermal Resistance Junction to Case	$R_{\theta JC}$	-	1.5	°C/W

Ratings and Characteristics Curve

Figure1 Typical Forward Characteristics

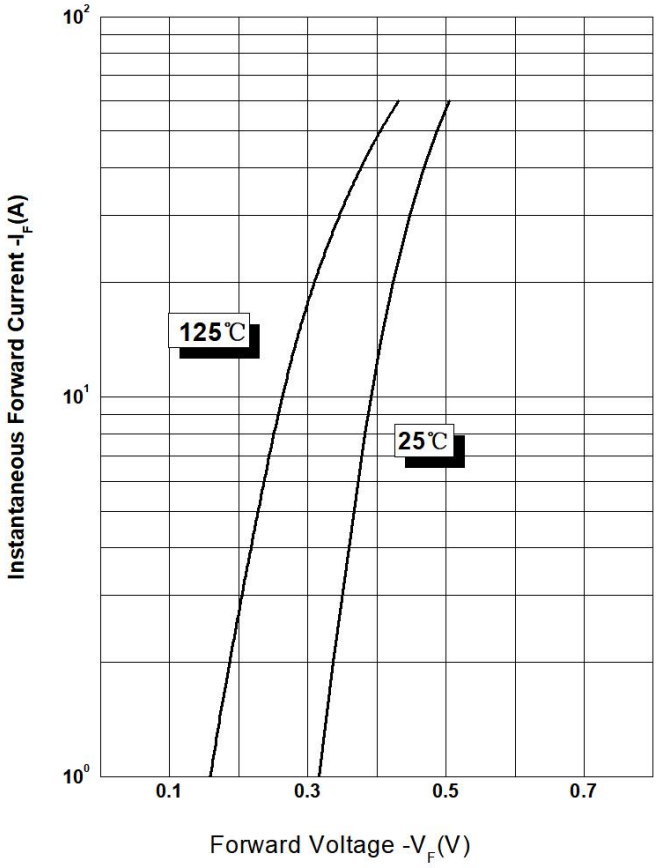

Figure 2 Typical Reverse Characteristics

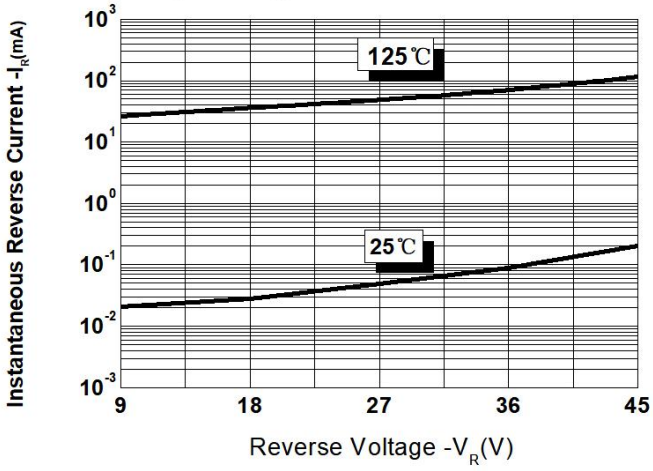

Figure 3 Typical Junction Capacitance

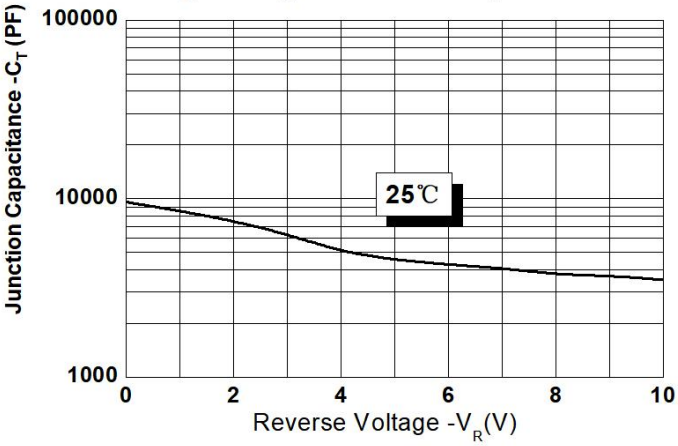

Technical Data
Data Sheet N2456, Rev.A

Ordering Information

Device	Package	Shipping
GF5045PC	GFM	30pcs / Tube

Marking Diagram

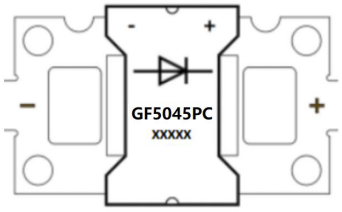

Where XXXXX is YYWWL

GF5045PC	= Marking Code
YY	= Year
WW	= Week
L	= Lot Number

Order P/N	Terminals	Additional
GF5045PC-S1	Tin Plated	None
GF5045PC-S2	Tin Plated	Solder Paste
GF5045PC-S3	Tin Plated	Solder Block
GF5045PC-N1	Nickel Plated	None
GF5045PC-N2	Nickel Plated	Solder Paste
GF5045PC-N3	Nickel Plated	Solder Block



Solder Paste



Solder Block

Mechanical Dimensions GFM (Millimeters)

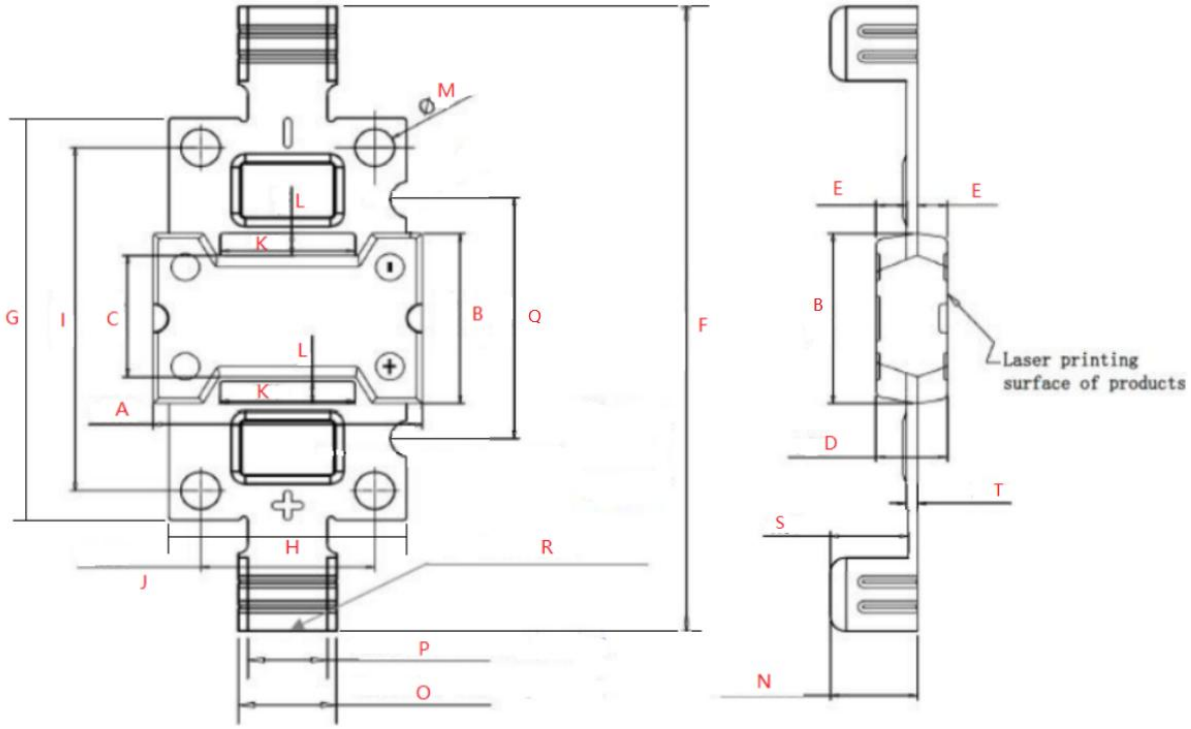

Symbol	Dimensions in millimeters		
	Min.	Typical	Max
A	16.90	17.00	17.10
B	11.38	11.48	11.58
C	8.15	8.20	8.25
D	4.40	4.50	4.60
E	1.85	1.90	1.95
F	41.90	42.00	42.10
G	26.90	27.00	27.10
H	14.90	15.00	15.60
I	22.90	23.00	23.10
J	10.90	11.00	11.10
K	-	8.50	-
L	-	1.50	-
M	-	⌀ 2.50	2.55
N	5.35	5.50	5.65
O	6.20	6.30	6.40
P	4.90	5.00	5.10
Q	15.95	16.00	16.05
R	2.80	2.90	3.00
S	4.75	4.80	4.85
T	0.67	0.70	0.73

Dimension H includes Burrs/cutting residuals.

Technical Data
Data Sheet N2456, Rev.A

DISCLAIMER:
1- The information given herein, including the specifications and dimensions, is subject to change without prior notice to improve product characteristics. Before ordering, purchasers are advised to contact the SMC Diode Solutions sales department for the latest version of the datasheet(s).
2- In cases where extremely high reliability is required (such as use in nuclear power control, aerospace and aviation, traffic equipment, medical equipment , and safety equipment) , safety should be ensured by using semiconductor devices that feature assured safety or by means of users' fail-safe precautions or other arrangement .
3- In no event shall SMC Diode Solutions be liable for any damages that may result from an accident or any other cause during operation of the user's units according to the datasheet(s). SMC Diode Solution assumes no responsibility for any intellectual property claims or any other problems that may result from applications of information, products or circuits described in the datasheets.
4- In no event shall SMC Diode Solutions be liable for any failure in a semiconductor device or any secondary damage resulting from use at a value exceeding the absolute maximum rating.
5- No license is granted by the datasheet(s) under any patents or other rights of any third party or SMC Diode Solutions.
6- The datasheet(s) may not be reproduced or duplicated, in any form, in whole or part, without the expressed written permission of SMC Diode Solutions.
7- The products (technologies) described in the datasheet(s) are not to be provided to any party whose purpose in their application will hinder maintenance of international peace and safety nor are they to be applied to that purpose by their direct purchasers or any third party. When exporting these products (technologies), the necessary procedures are to be taken in accordance with related laws and regulations..

Unikeyic Electronics

Global Electronic Components Distributor

Click to view pricing, inventory, delivery, and lifecycle information:

SMC:

MBR1550S MBRF10100CT MBRF2060CT S2M0120120K SMBJ33CATR 151CMQ045 3.0SMCJ22CA BZT52B5V1S MMSZ5261B SCT825B MBR30100 5.0SMCJ33A 5.0SMCJ60CA MBR4080CT S8ULCC36-2 CESD24VD5 MBRB10200CT SDUR1040 STB60100C STD20100CE SST24A-800BW MBR60150CT MB6F SF14G UG2KB100 183NQ100R-1 83CNQ080 MBR40200WT SDURB860A SDURD1030