JYEG

RoHS Compliant

Tangshan Guoxin Jingyuan Electronics Co.,Ltd

Add：Xinxing Electronics Industrial Park, Yutian,Tangshan,Hebei,China

TEL: 86-315-6118243 **E-mail: sales@jingyuan.com**

FAX: 86-315-6113576 **Web : www.jingyuan.com**

APPROVAL SHEET

Customer :

Part Number :

JYEG P/N : JYGD3

Holder : SMD3225 GLASS

Frequency : 12.000~55.46667MHZ

Manufacturer : Guoxin Jingyuan Electronics

Date : 2025/12/30

Prepared	Checked	Approved
Huang Mingxing	Yang Tiesheng	Zhang Liqiang

(For Customer Use)

Acceptable	Non-Acceptable

Revision History

No.	Revised Date	Change Content	Approved	Remark
V1.0	25.12.30	Initial release	Yang Tiesheng	

1.This specification applies to SMD quartz crystal unit with a frequency of 12.000~55.46667MHz.

2. Electrical characteristics

ITEM/TYPE	SMD3225 GLASS
Frequency Range	12.000~55.46667MHz
Mode of Vibration	Fundamental
Frequency Tolerance (at 25°C)	±15ppm,or specify
Frequency Stability Over Operating Temperature Range	±30ppm/-40~85°C, ±50ppm, ±100ppm/-40~125°C, or specify
Shunt Capacitance	3pF Max.
Load Capacitance	6~50pF or Series
Resonance Resistance	As per below table1.
Drive Level	300μW Max.
Aging	±3ppm/year
Insulation Resistance	500MΩ@DC100V
Storage Temperature Range	-55~125°C

Frequency	Resonance Resistance
12.000~20.000MHz	80Ω Max.
20.000~40.000MHz	45Ω Max.
40.000~55.46667MHz	30Ω Max.

3. Construction

3.1 Crystal enclosure seal:

■ Seam seal ☐ resistance weld ☐ cold weld

3.2 crystal enclosure medium

■ nitrogen ☐ vacuum ☐ dry air

4.Dimension:

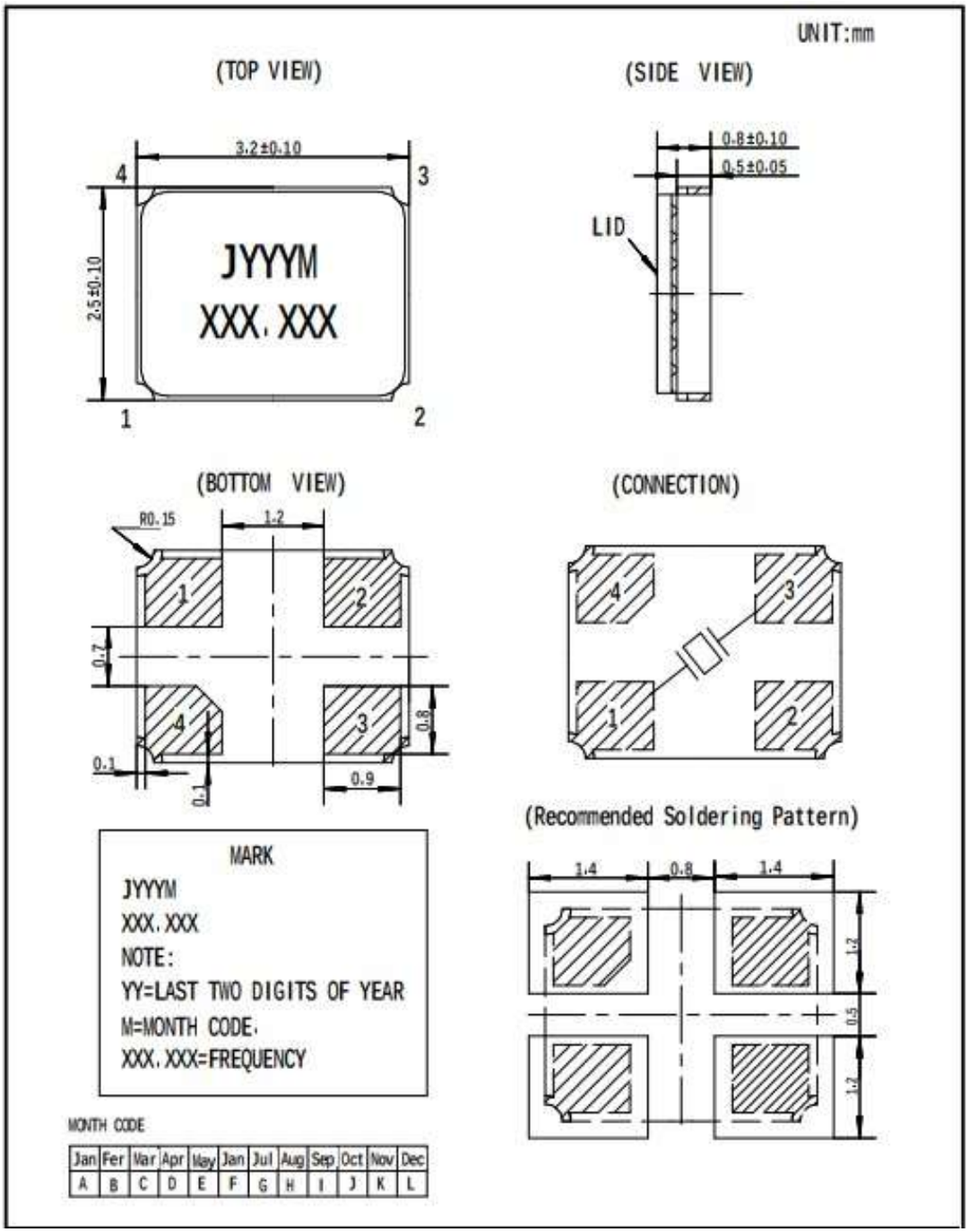

Jan	Fer	Mar	Apr	May	Jan	Jul	Aug	Sep	Oct	Nov	Dec
A	B	C	D	E	F	G	H	I	J	K	L

5. Marking

■ Laser Marking ☐ Ink Marking

6.Inside Structure

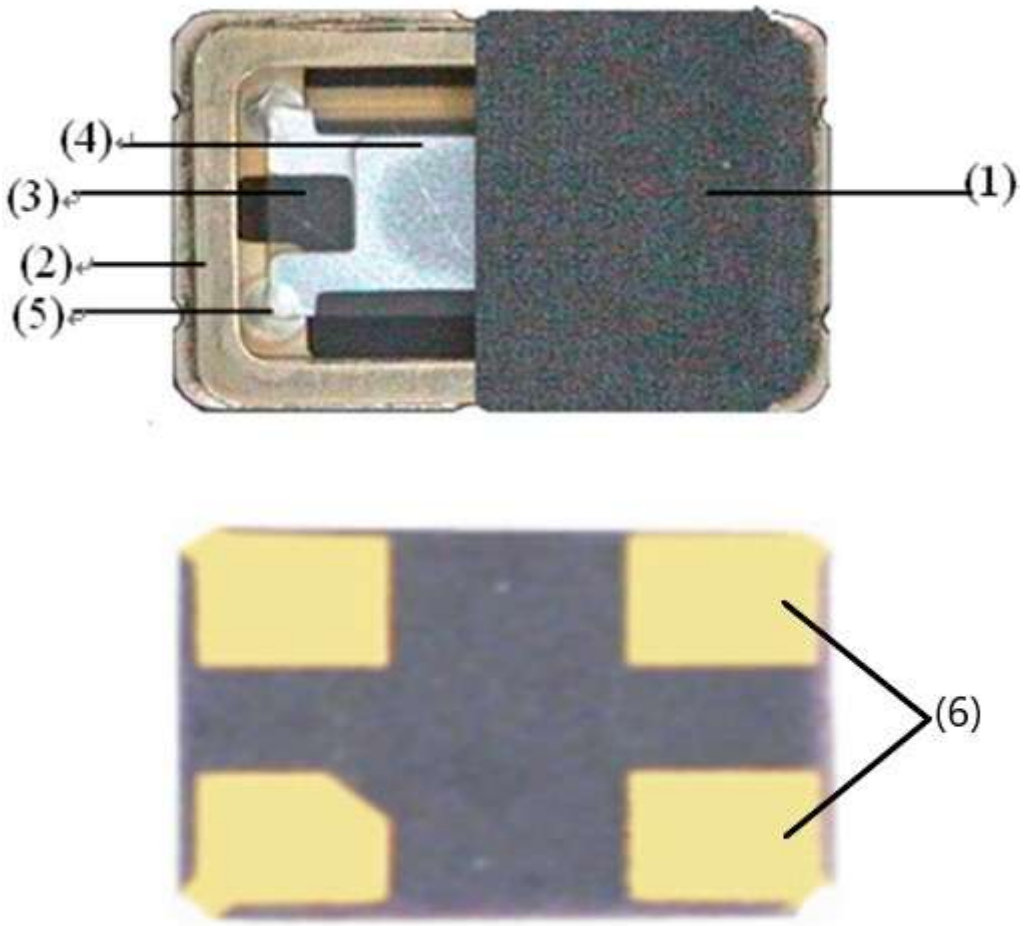

No.	Name	Material
(1)	Can	Ceramic
(2)	Base	Ceramic
(3)	Blank	Quartz
(4)	Electrode	Ag
(5)	Epoxy	Silicon based
(6)	Soldering Pads	Au plated

7.Taping Dimension and Packing Instruction

7.1

UNIT:mm

1.Dimensions of Carrier Tape

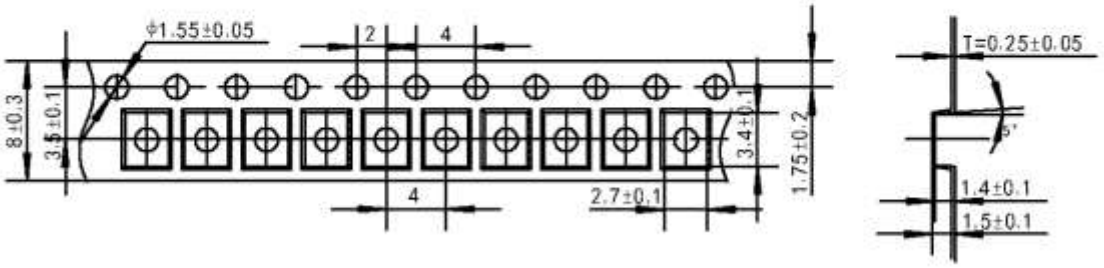

2.Dimensions of Reel

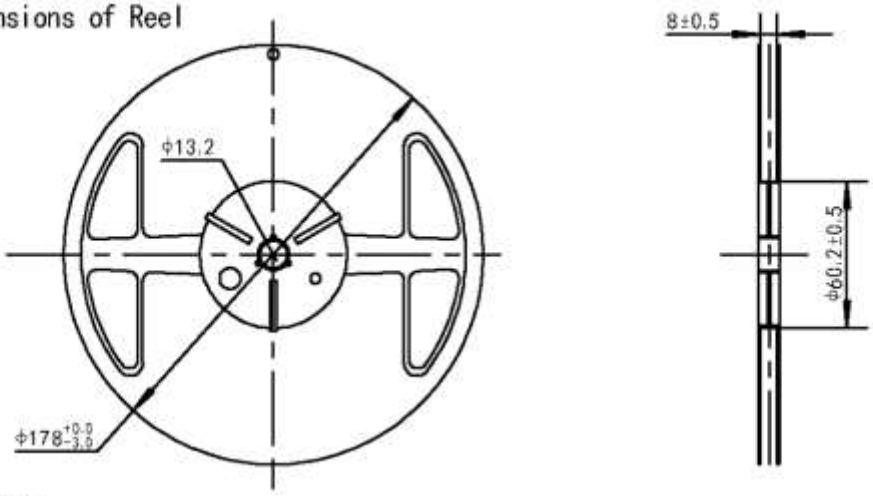

3.Packing

1 reel/box 1 reel=3000pcs

10 boxes/carton(the carton with bubble pad on four sides)

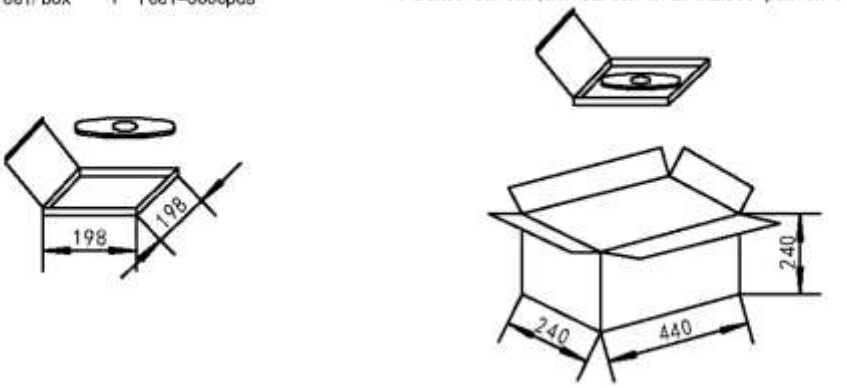

7.2

Release strength of cover tape

It has to between 30g to 90g under following condition.

Pulling direction : 165 deg. to 180 deg.

Speed : 300mm/min.

Otherwise unless specified.

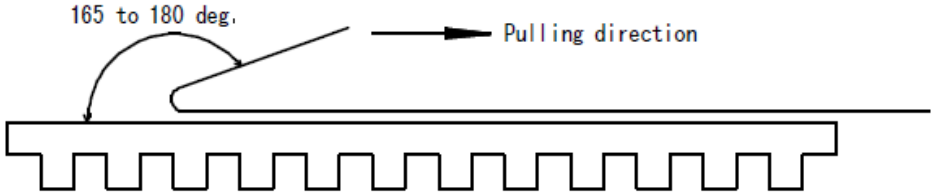

8.Reliability characteristic:

NO	Item	Condition	Specifications	Reference
8.1	HighTemperature Exposure (Storage) 高温存储	1000 hrs. at rated operating temperature r 1000 hrs at 85°C. npowered.Measurement at 24±2 hours after test conclusion. 元件就贮存在 85°C 下 1000 小时，在试验结束后 24±2 小时测试。	△F/F0≤+/-10ppm ESR≤5Ωor20%	MIL-STD-202 Method 108
8.2	Temperature Cycling 温度循环	-40° C to125°C part the1000 cycles will be at that perature rating.Measurement at 24±2 hours after test conclusion.30min maximum dwell time at each temperature extreme. 1 min. maximum transition time. 从-40℃~+125°C 1000 次循环。在试验结束后 24±2 小时测试。每个温度的停留时间不超过 30 分钟。转换时间不超过 1 分钟。	△F/F0≤+/-10ppm ESR≤5Ωor20%	JESD22 Method JA-104
8.3	Biased Humidity 稳态湿热	1000 hours 85°C/85%RH. Rated VDD applied with 1MΩ and inverter in parallel, 2X resonator CL capacitors between each resonator leg and GND.Measurement at 24±2 hours after test conclusion. 在温度 85°C，湿度 85%的条件下放置 1000 个小时在试验结束后 24±2 小时测试。	△F/F0≤+/-10ppm ESR≤5Ωor20%	MIL-STD-202 Method 103
8.4	Operational Life 高温寿命	125°C 1000 hrs. Measurement at 24±2 hours after test conclusion. 125°C 下 1000 个小时，用相同测试线路在时间结束后 24±2 小时测试。	△F/F0≤+/-10ppm ESR≤5Ωor20%	MIL-STD-202 Method 108

8.5	Mechanical Shock 机械冲击	MIL-STD-202Method 213Figure 1 of Method 213. Condition C 见 213 方法，试验条件：半正弦波 峰值 100g 持续时间 6ms 速度变化 3.75m/s，对样品 6 个方向 3 次，共 18 次施以冲击	△F/F0≤+/-10ppm ESR≤5Ωor20%	MIL-STD-202 Method 213
8.6	Vibration 振动	MIL-STD-202Method 204 5g 的力 20 分钟，用 8*5*0.031 英寸的 PCB 在 3 个方向各做 12 个循环。在 8 英寸边上有 7 个支撑点，在对面的角上两个支撑点。器件安装在任意一个支撑点的 2 英寸范围内。测试从 10HZ-2000HZ.	△F/F0≤+/-10ppm ESR≤5Ωor20%	MIL-STD-202 Method 204
8.7	Resistance to Soldering Heat 耐焊接热	Condition B No pre-heat of samples. Note: SingleWave solder - Procedure 1 with solder within 1.5 mm of device body for Leaded. Procedure 1 except 245°C and immerse only to level to cover terminals for SMD. 未预热的样品 Condition B. 备注：单波焊接-Porcedure 1 引脚产品焊料少于 1.5mm,除了 245℃外其他 Procedure 1，SMD 产品浸到覆盖 SMD 引脚。	△F/F0≤+/-10ppm ESR≤5Ωor20%	MIL-STD-202 Method 210
8.8	Solderability 可焊性	引脚产品： Method A@245℃,category 3. SMD 产品：Method D category3 @260℃ √	Electrical Test not required. Magnification 50 X.>95%tin 不测电参数 >95%浸润.	J-STD-002
8.9	Board Flex 线路板弯曲	60 sec minimum holding time. 最少保留 60 秒。	10 倍放大镜下检查没有明显伤痕。	AEC Q200-005
8.10	Terminal Strength 引线、引脚强度 (SMD)	Terminal Strength Surface Mount / Shear Stress Test 施加 1.8kg 力 60 sec 测试带引脚器件的引脚整体试验。 条件： A(2.27Kg) C(227g)	有明显断裂、伤痕。	AEC Q200-006

9.All products are RoHs compliant

10. Reflow Profile

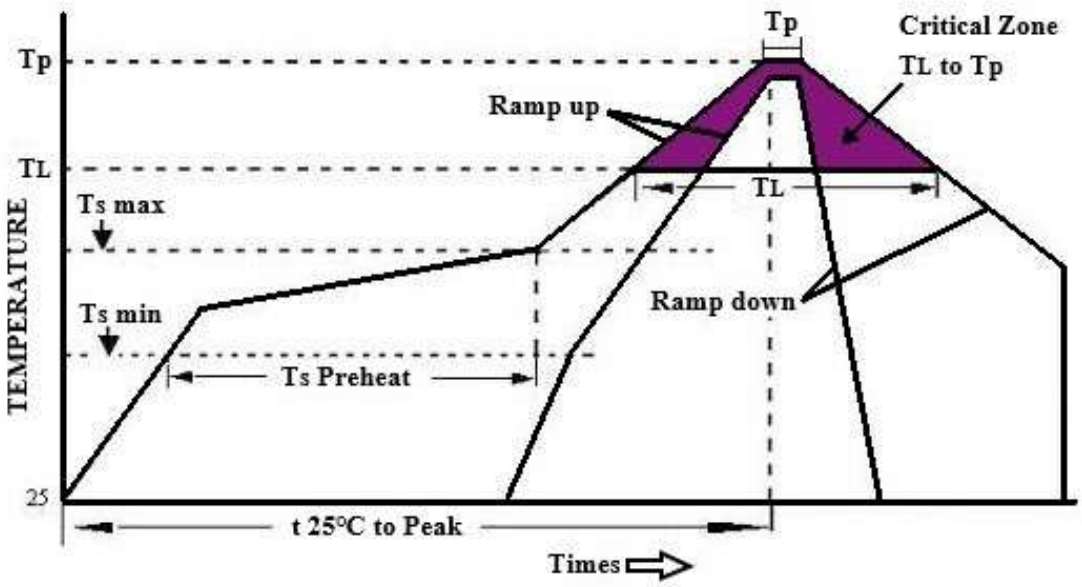

High Temperature Infrared /Convection

Note:Temperature shown are applied to body of device

Ts max to T_L(Ramp-up Rate)	3℃/second max
Preheat Temperature Min(Ts Min) Temperature Typical(Ts Typ) Temperature Max.(Ts Max) Time(ts)	 150℃ 175℃ 200℃ 60-180 seconds
Ram-up Rate(T_L to Tp)	3℃/second Max
Time Maintained Above: --Temperature(T_L) --Time(T_L)	 217℃ 60-150seconds
Peak Temperature (Tp)	260℃ Max for 10 seconds
Time within 5℃ of actual peak(t_p)	20-40 seconds
Ramp-down Rate	6℃/seconds Max
Tune 25℃ to Peak Temperature(t)	8 minutes Max
Moisture Sensitivity Level	Level 1

High Temperature Manual Soldering

Note:Temperature shown are applied to body of device

260℃ Max for 10 seconds Max, 4 times Max

Unikeyic Electronics

Global Electronic Components Distributor

Click to view pricing, inventory, delivery, and lifecycle information:

JYEG:

JYD2A1G7G9-18-25.000000 JYD5A1C7GZ-12-13.225625 JYD5A1E7G8-18-25.000000
JYOD2H7H3C5Y-25.000000 JYOD7H7G3C5Y-10.000000 JYD3A1C7G5-14-26.000000
JYD5A1G7GZ-18-25.000000 JYD5A1Z7GZ-20-25.000000 JYGD5A1E7G6-18-9.830400
JYD3A1Z3E4-10-32.000000 JYD5A1C2C4-10-12.288000 JYGD5A1E1B6-18-25.000000
JYD2A1G3D9-10-25.000000 JYD3A1C7G6-9-32.000000 JYGD3A1G2C8-10-26.000000
JYD3A1C2C4-10-32.000000 JYD7A1C7G8-20-10.000000 JYOD5H7G3C5Y-25.000000
JYD5A1C5G5-10-25.000000 JYD5A1G3D9-13-25.000000 JYD5A1G7G6-20-25.000000
JYD5A1G7G8-20-25.000000 JYD5A1Z2C4-10-27.000000 JYGD5A1E3D6-20-25.000000
JYD2A1Z3F4-10-25.000000 JYD5A1G7G8-20-10.000000 JYGD3A1E7G8-18-12.288000
JYOD7E7G3C5Y-12.288000 JYD5A1C7GZ-20-9.830400 JYGD5A1G3D8-18-9.830400