2205 E-2RS1TN9

Dimensions

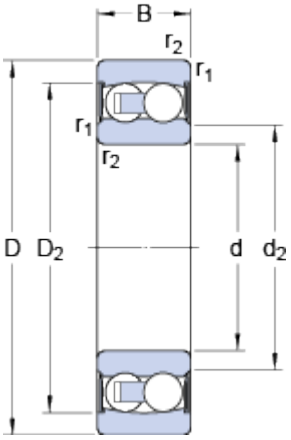

d		25	mm
D		52	mm
B		18	mm
d_2	≈	31	mm
D_2	≈	46.21	mm
$r_{1,2}$	min.	1	mm

Abutment dimensions

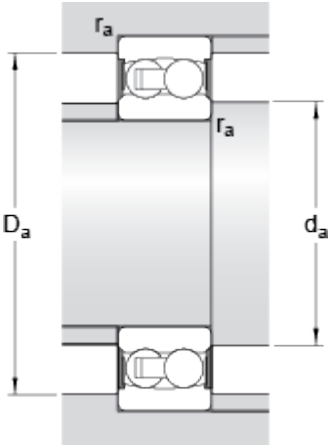

d_a	min.	30.6	mm
d_a	max.	31	mm
D_a	max.	46.4	mm
r_a	max.	1	mm

Calculation data

Basic dynamic load rating	C	14.3	kN
Basic static load rating	C_0	4	kN
Fatigue load limit	P_u	0.21	kN
Limiting speed		9000	r/min
Calculation factor	k_r	0.045	
Calculation factor	e	0.28	
Calculation factor	Y_0	2.5	
Calculation factor	Y_1	2.2	
Calculation factor	Y_2	3.5	

Mass

Mass bearing	0.16	kg

Unikeyic Electronics

Global Electronic Components Distributor

Click to view pricing, inventory, delivery, and lifecycle information:

SKF:

6205-2Z/VA208 6213-2Z FYJ 30 TF NU 2313 ECML/C3 16052 MA 22234 CCK/C3W33 6012-2Z/C3 NJ 309 ECJ/C3 UCF 310 2211 EKTN9/C3 6219-2Z/C3 W61903-2RS1 22344 CC/C3W33 23972 CC/W33 61840 MA 23056 CC/W33 N 318 ECM 3210 ATN9 99114 SY 45 TF 24044 CCK30/W33 6211/C3 SNL 518-615 TKRS 11 TSN 528 S 6226-2Z/C3 FYJ 50 TF FYJ 65 KF NU 1022 ML NUP 208 ECP