RB068LAM-40TFTR
SCHOTTKY RECTIFIER DIODES

Features

- Average Forward Current:$I_{F(AV)}$=2A
- Polarity: Color band denotes cathode



SMAF



Package Marking and Ordering Information

Product ID	Pack	Marking	Qty(PCS)
RB068LAM-40TFTR	SMAF	SS24F	3000

Maximum Ratings (Ta=25°C unless otherwise noted)

Type Number	Limit	Unit
Maximum Recurrent Peak Reverse Voltage	40	V
Maximum RMS Voltage	28	V
Maximum DC Blocking Voltage	40	V
Maximum Average Forward Rectified Current See Fig. 1	2.0	A
Peak Forward Surge Current, 8.3 ms single half sine-wave superimposed on rated load (JEDEC method)	50	A
Maximum Instantaneous Forward Voltage at 2.0A	0.55	V
Maximum DC Reverse Current Ta=25°C at Rated DC Blocking Voltage Ta=100°C	0.1 5	mA mA
Typical Junction Capacitance (Note1)	170	pF
Typical Thermal Resistance $R_{\theta JA}$ (Note 2)	75	°C/W
Operating junction Temperature Range T_J	-65 —+150	°C
Storage Temperature Range T_{STG}	-65 — +150	°C

NOTES:

1. Measured at 1MHz and applied reverse voltage of 4.0V D.C.

2. Thermal Resistance Junction to Ambient.

Typical Characteristics

FIG.1-TYPICAL FORWARD CURRENT DERATING CURVE

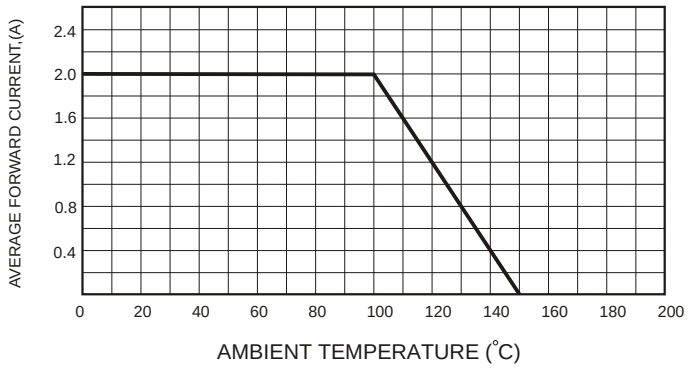

FIG.2-TYPICAL FORWARD CHARACTERISTICS

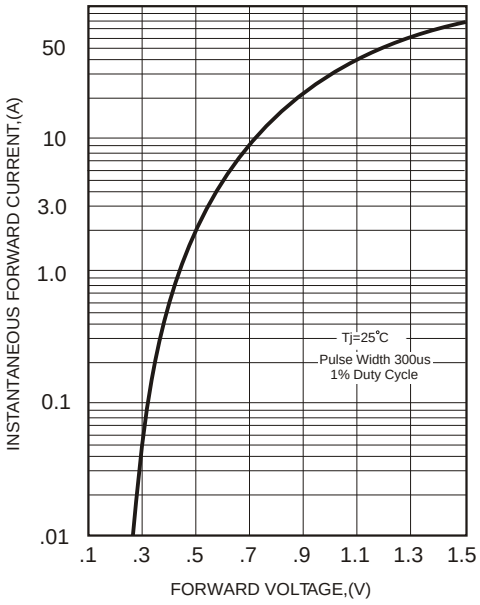

FIG.3-MAXIMUM NON-REPETITIVE FORWARD SURGE CURRENT

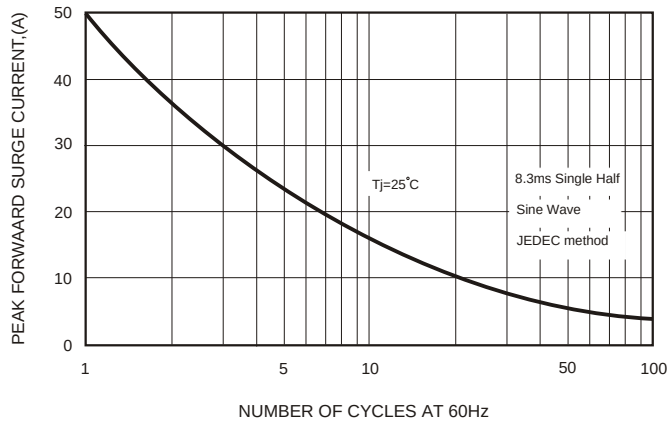

FIG.4-TYPICAL JUNCTION CAPACITANCE

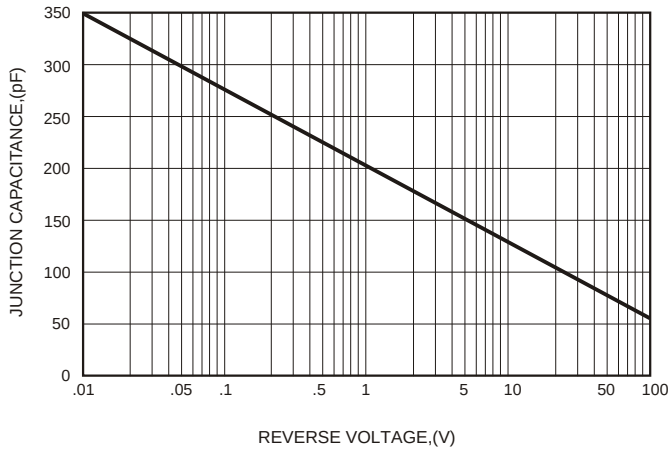

FIG.5 - TYPICAL REVERSE CHARACTERISTICS

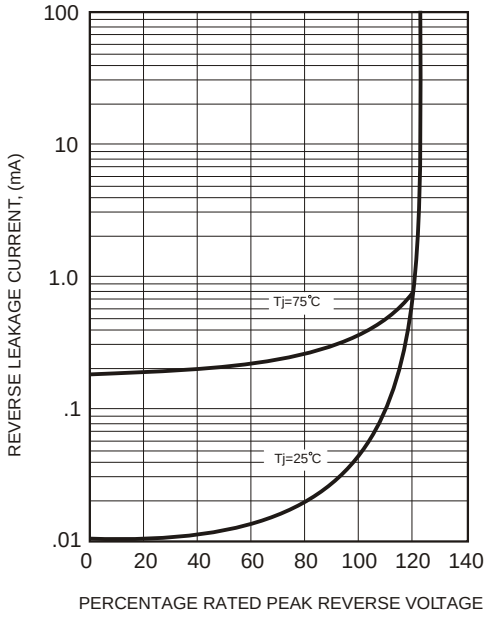

SMAF Package Outline Dimensions

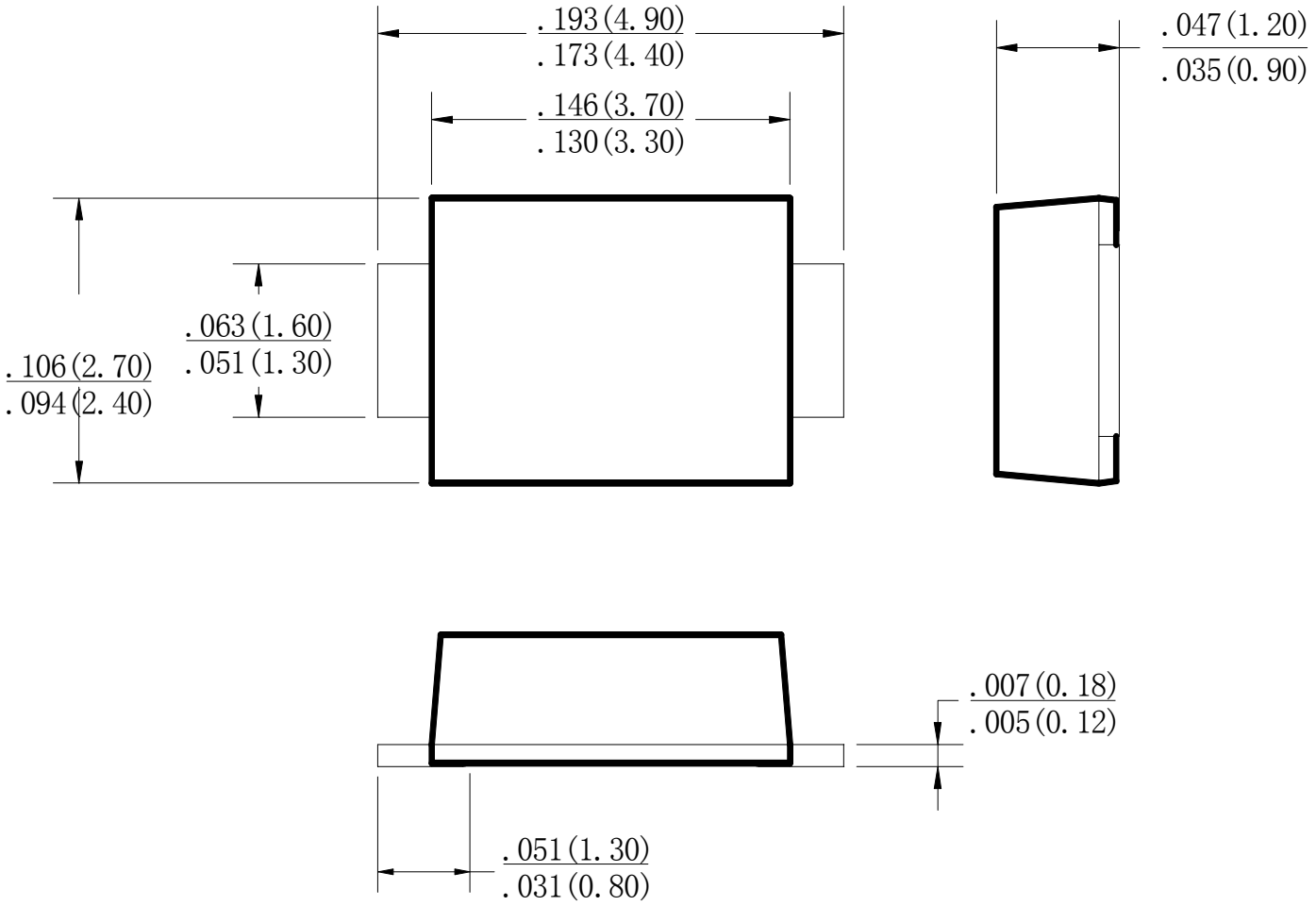

Dimensions in inches and (millimeters)

Attention

■ Any and all HUA XUAN YANG ELECTRONICS products described or contained herein do not have specifications that can handle applications that require extremely high levels of reliability, such as life-support systems, aircraft's control systems, or other applications whose failure can be reasonably expected to result in serious physical and/or material damage. Consult with your HUA XUAN YANG ELECTRONICS representative nearest you before using any HUA XUAN YANG ELECTRONICS products described or contained herein in such applications.

■ HUA XUAN YANG ELECTRONICS assumes no responsibility for equipment failures that result from using products at values that exceed, even momentarily, rated values (such as maximum ratings, operating condition ranges, or other parameters) listed in products specifications of any and all HUA XUAN YANG ELECTRONICS products described or contained herein.

■ Specifications of any and all HUA XUAN YANG ELECTRONICS products described or contained herein stipulate the performance, characteristics, and functions of the described products in the independent state, and are not guarantees of the performance, characteristics, and functions of the described products as mounted in the customer's products or equipment. To verify symptoms and states that cannot be evaluated in an independent device, the customer should always evaluate and test devices mounted in the customer's products or equipment.

■ HUA XUAN YANG ELECTRONICS CO.,LTD. strives to supply high-quality high-reliability products. However, any and all semiconductor products fail with some probability. It is possible that these probabilistic failures could
give rise to accidents or events that could endanger human lives, that could give rise to smoke or fire, or that could cause damage to other property. When designing equipment, adopt safety measures so that these kinds of accidents or events cannot occur. Such measures include but are not limited to protective circuits and error prevention circuits for safe design, redundant design, and structural design.

■ In the event that any or all HUA XUAN YANG ELECTRONICS products(including technical data, services) described or contained herein are controlled under any of applicable local export control laws and regulations, such products must not be exported without obtaining the export license from the authorities concerned in accordance with the above law.

■ No part of this publication may be reproduced or transmitted in any form or by any means, electronic or mechanical, including photocopying and recording, or any information storage or retrieval system, or otherwise, without the prior written permission of HUA XUAN YANG ELECTRONICS CO.,LTD.

■ Information (including circuit diagrams and circuit parameters) herein is for example only ; it is not guaranteed for volume production. HUA XUAN YANG ELECTRONICS believes information herein is accurate and reliable, but no guarantees are made or implied regarding its use or any infringements of intellectual property rights or other rights of third parties.

■ Any and all information described or contained herein are subject to change without notice due to product/technology improvement, etc. When designing equipment, refer to the "Delivery Specification" for the HUA XUAN YANG ELECTRONICS product that you intend to use.

Unikeyic Electronics

Global Electronic Components Distributor

Click to view pricing, inventory, delivery, and lifecycle information:

HXY MOSFET:

HSEN2411D3 HSG3D15B3.3MA RLSD32A121V HCEZ36V,L3F LM393DR-HXY PESDNC2XD5VBL PESDSC2FD5VU TPSMB28A-VR ESD5LM5.0C-HXY HAZ4007-01H PESDLC2FD3V3BH 60N06 AZ4007-01H HESDSLC3V3D3B HPTVSUC3D5VB HSEN3611D3 BV05C-H TPSMB100CA-VR HLY323BC1524L HSTS521050B331 PJEC5V0M1FN2 PJSD24CW_R1 AQ15C-01FTG ESD5L5.0C-HXY HESD36VD3B HRCLAMP3371ZCTFT PESDNC2XD5VBF AZ4836-01L HACPDQC5V0-HF HSD15C.TCT