标 记 MARK	ECN编号/变更内容 ECN NO/DEFINITION	修 改 REVISE	日 期 DATE	核 准 APPROVE

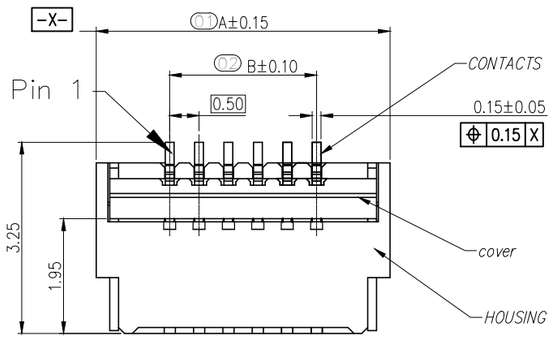

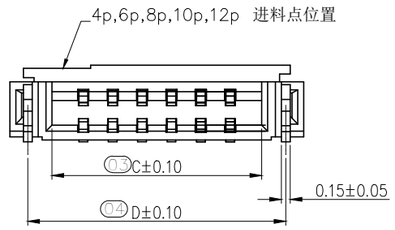

Number of Contacts	DIM A	DIM B	DIM C	DIM D	DIM E	Number of Contacts	DIM A	DIM B	DIM C	DIM D	DIM E
15	9.50	7.00	8.07	8.89	8.00	40	22.00	19.50	20.57	21.39	20.50
14	9.00	6.50	7.57	8.39	7.50	34	19.00	16.50	17.57	18.39	17.50
13	8.50	6.00	7.07	7.89	7.00	32	18.00	15.50	16.57	17.39	16.50
12	8.00	5.50	6.57	7.39	6.50	30	17.00	14.50	15.57	16.39	15.50
10	7.00	4.50	5.57	6.39	5.50	28	16.00	13.50	14.57	15.39	14.50
9	6.50	4.00	5.07	5.89	5.00	26	15.00	12.50	13.57	14.39	13.50
8	6.00	3.50	4.57	5.39	4.50	24	14.00	11.50	12.57	13.39	12.50
7	5.50	3.00	4.07	4.89	4.00	22	13.00	10.50	11.57	12.39	11.50
6	5.00	2.50	3.57	4.39	3.50	20	12.00	9.50	10.57	11.39	10.50
5	4.50	2.00	3.07	3.89	3.00	18	11.00	8.50	9.57	10.39	9.50
4	4.00	1.50	2.57	3.39	2.50	16	10.00	7.50	8.57	9.39	8.50

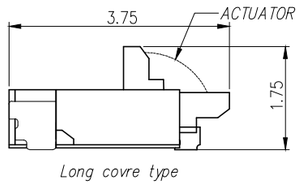

Long covre type

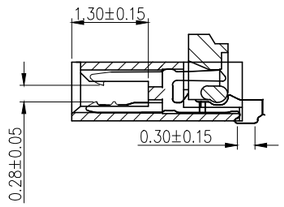

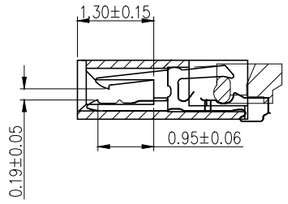

NOTE:
1. MATERIAL:
   HOUSING: LCP COLOR: NATURAL.
   CONTACTS: COPPER ALLOY.
   PEG: COPPER ALLOY.
   ACTUATOR: LCP OR PA. COLOR:BLACK
2. RATING:
   OPERATING VOLTAGE: 50Vrms AC.
   CURRENT RATING: 0.5A.
   OPERATING TEMPERATURE: -55℃~+85℃.
   OPERATING HUMIDITY RANGE: RELATIVE HUMIDITY 90% MAX.(NO CONDENSATION)
   STORAGE TEMPERATURE RANGE: -10℃~+50℃.
   STORAGE HUMIDITY RANGE: RELATIVE HUMIDITY 90% MAX.(NO CONDENSATION)

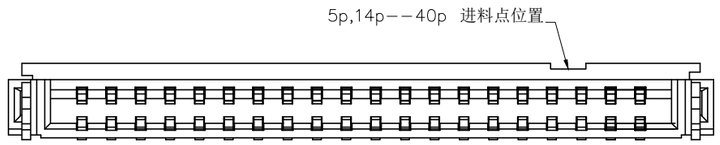

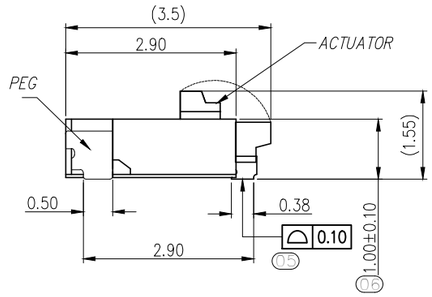

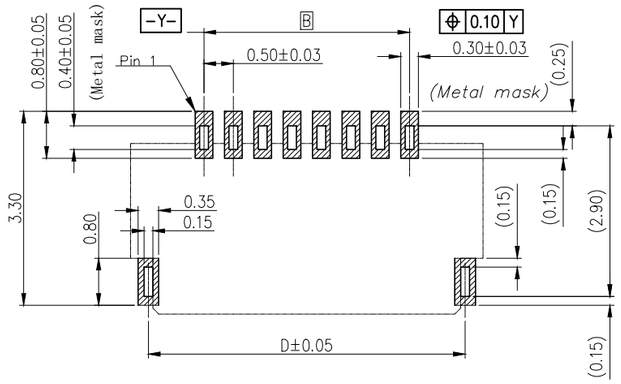

Recommended PCB mounting pattern and metal mask dimensions

Recommended metal mask thickness: t=0.1

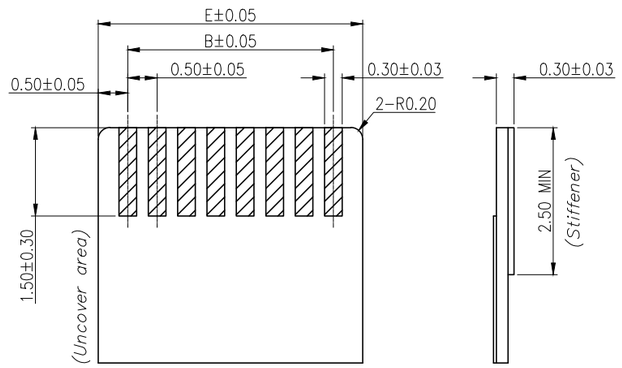

Recommended FPC/FFC Dimensions

序 号	品 名	材 质	电镀/颜色	备 注
2	端子	铜	点镀金	
1	基座	LCP	本色	

深圳市虹成电子有限公司

品 名 TITLE	FPC座
料 号 PART NO	HC-FPC-0.5-10P-FHH10

GENERAL TOLERANCES (UNLESS SPECIFIED)

X.X : ±0.30 X.X° : ±5°

X.XX : ±0.20 X.XX° : ±2°

比 列 SCALE	1:1		
单 位 UNIT	MM	制 图 DRAW	AhYe
张 数 PART NO	1 OF 1	审 核 CHECKED	夏操云
版 本 REV	A	批 准 APPROVE	赵亮亮

Unikeyic Electronics

Global Electronic Components Distributor

Click to view pricing, inventory, delivery, and lifecycle information:

HC:

HC-FPC-0.5-50P-FHH20 HC-PM254-8.5H-1x21PZ HC-PZ254-11.5L-1x20PZ HC-USB3.0-L257-J HCZZ0451-6 HC-FPC-0.5-6P-CSH20 HC-PHB2.0-2x4AW HC-PHB2.0-2x5A HC-PM254-8.5H-2x20PS HC-PM254-8.5H-2x30PZ HC-PM200-4.3H-2x6PS HC-PM200-4.3H-2x8PS HC-PZ254-11.5L-1x10PZ HC-FPC-0.5-10P-FH20 HC-FPC-0.5-40P-FH20 HCZZ0032-6 HCZZ0514-6 HCZZ0451-4 HC-PM254-5.0H-2x10PZ HC-USB3.0-C26 HC-USB3.0-C34-P HC-USB3.0-L175-2X1-J HCZZ0576-5 HC-FPC-0.5-24P-FH20 HC-PM200-4.3H-2x20PZ HC-PZ127-7.2L-2x3PS HC-PZ254-11.5L-2x18PZ HC-PZ254-13.8L-1x6PWA HC-USB2.0-L100-093P HCZZ0001-2