International
IOR Rectifier

PD - 94818

IRF520NPbF

HEXFET® Power MOSFET

- Advanced Process Technology
- Dynamic dv/dt Rating
- 175°C Operating Temperature
- Fast Switching
- Fully Avalanche Rated
- Lead-Free

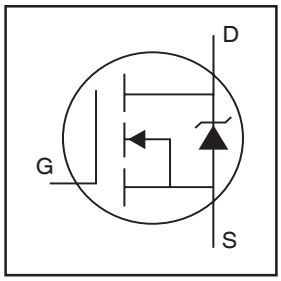

V_{DSS} = 100V

$R_{DS(on)}$ = 0.20Ω

I_D = 9.7A

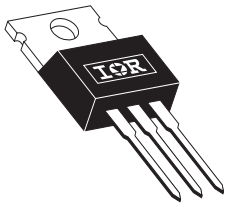

TO-220AB

Description

Fifth Generation HEXFETs from International Rectifier utilize advanced processing techniques to achieve extremely low on-resistance per silicon area. This benefit, combined with the fast switching speed and ruggedized device design that HEXFET Power MOSFETs are well known for, provides the designer with an extremely efficient and reliable device for use in a wide variety of applications.

The TO-220 package is universally preferred for all commercial-industrial applications at power dissipation levels to approximately 50 watts. The low thermal resistance and low package cost of the TO-220 contribute to its wide acceptance throughout the industry.

Absolute Maximum Ratings

	Parameter	Max.	Units
I_D @ T_C = 25°C	Continuous Drain Current, V_{GS} @ 10V	9.7	A
I_D @ T_C = 100°C	Continuous Drain Current, V_{GS} @ 10V	6.8	
I_{DM}	Pulsed Drain Current ①	38	
P_D @T_C = 25°C	Power Dissipation	48	W
	Linear Derating Factor	0.32	W/°C
V_{GS}	Gate-to-Source Voltage	± 20	V
E_{AS}	Single Pulse Avalanche Energy②	91	mJ
I_{AR}	Avalanche Current①	5.7	A
E_{AR}	Repetitive Avalanche Energy①	4.8	mJ
dv/dt	Peak Diode Recovery dv/dt ③	5.0	V/ns
T_J	Operating Junction and	-55 to + 175	°C
T_{STG}	Storage Temperature Range		
	Soldering Temperature, for 10 seconds	300 (1.6mm from case)	
	Mounting torque, 6-32 or M3 srew	10 lbf•in (1.1N•m)	

Thermal Resistance

	Parameter	Typ.	Max.	Units
$R_{\theta JC}$	Junction-to-Case	——	3.1	°C/W
$R_{\theta CS}$	Case-to-Sink, Flat, Greased Surface	0.50	——	
$R_{\theta JA}$	Junction-to-Ambient	——	62	

Electrical Characteristics @ T_J = 25°C (unless otherwise specified)

	Parameter	Min.	Typ.	Max.	Units	Conditions
$V_{(BR)DSS}$	Drain-to-Source Breakdown Voltage	100	—	—	V	V_{GS} = 0V, I_D = 250µA
$\Delta V_{(BR)DSS}/\Delta T_J$	Breakdown Voltage Temp. Coefficient	—	0.11	—	V/°C	Reference to 25°C, I_D = 1mA
$R_{DS(on)}$	Static Drain-to-Source On-Resistance	—	—	0.20	Ω	V_{GS} = 10V, I_D = 5.7A ④
$V_{GS(th)}$	Gate Threshold Voltage	2.0	—	4.0	V	V_{DS} = V_{GS}, I_D = 250µA
g_{fs}	Forward Transconductance	2.7	—	—	S	V_{DS} = 50V, I_D = 5.7A
I_{DSS}	Drain-to-Source Leakage Current	—	—	25	µA	V_{DS} = 100V, V_{GS} = 0V
		—	—	250		V_{DS} = 80V, V_{GS} = 0V, T_J = 150°C
I_{GSS}	Gate-to-Source Forward Leakage	—	—	100	nA	V_{GS} = 20V
	Gate-to-Source Reverse Leakage	—	—	-100		V_{GS} = -20V
Q_g	Total Gate Charge	—	—	25	nC	I_D = 5.7A
Q_{gs}	Gate-to-Source Charge	—	—	4.8		V_{DS} = 80V
Q_{gd}	Gate-to-Drain ("Miller") Charge	—	—	11		V_{GS} = 10V, See Fig. 6 and 13 ④
$t_{d(on)}$	Turn-On Delay Time	—	4.5	—	ns	V_{DD} = 50V
t_r	Rise Time	—	23	—		I_D = 5.7A
$t_{d(off)}$	Turn-Off Delay Time	—	32	—		R_G = 22Ω
t_f	Fall Time	—	23	—		R_D = 8.6Ω, See Fig. 10 ④
L_D	Internal Drain Inductance	—	4.5	—	nH	Between lead, 6mm (0.25in.) from package and center of die contact
L_S	Internal Source Inductance	—	7.5	—		
C_{iss}	Input Capacitance	—	330	—	pF	V_{GS} = 0V
C_{oss}	Output Capacitance	—	92	—		V_{DS} = 25V
C_{rss}	Reverse Transfer Capacitance	—	54	—		f = 1.0MHz, See Fig. 5

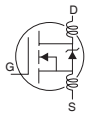

Source-Drain Ratings and Characteristics

	Parameter	Min.	Typ.	Max.	Units	Conditions
I_S	Continuous Source Current (Body Diode)	—	—	9.7	A	MOSFET symbol showing the integral reverse p-n junction diode.
I_{SM}	Pulsed Source Current (Body Diode) ①	—	—	38		
V_{SD}	Diode Forward Voltage	—	—	1.3	V	T_J = 25°C, I_S = 5.7A, V_{GS} = 0V ④
t_{rr}	Reverse Recovery Time	—	99	150	ns	T_J = 25°C, I_F = 5.7A
Q_{rr}	Reverse RecoveryCharge	—	390	580	nC	di/dt = 100A/µs ④

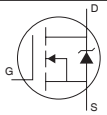

Notes:

① Repetitive rating; pulse width limited by max. junction temperature. (See fig. 11)

② V_{DD} = 25V, starting T_J = 25°C, L = 4.7mH R_G = 25Ω, I_{AS} = 5.7A. (See Figure 12)

③ I_{SD} ≤ 5.7A, di/dt ≤ 240A/µs, V_{DD} ≤ $V_{(BR)DSS}$, T_J ≤ 175°C

④ Pulse width ≤ 300µs; duty cycle ≤ 2%.

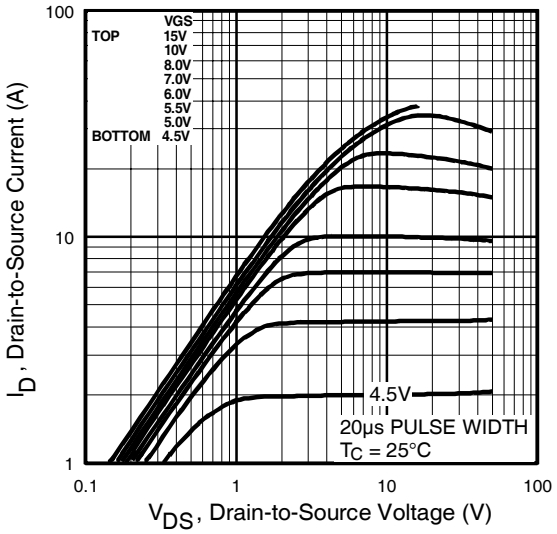

Fig 1. Typical Output Characteristics

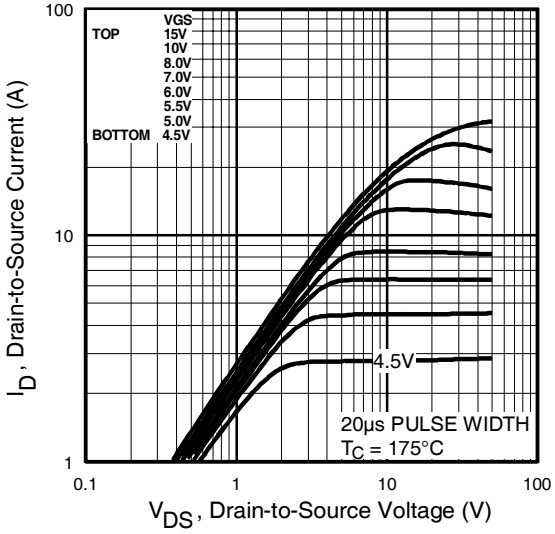

Fig 2. Typical Output Characteristics

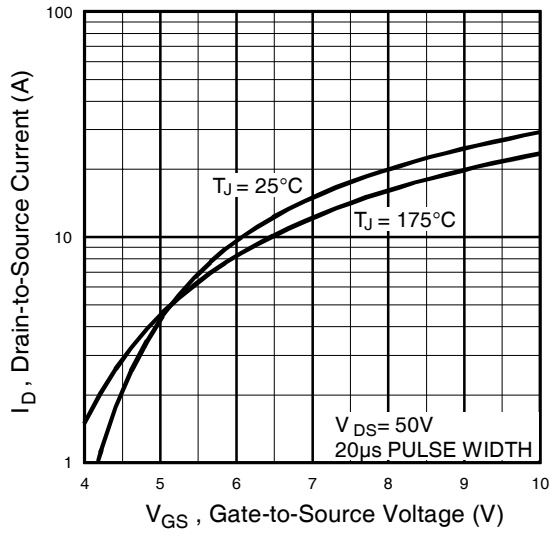

Fig 3. Typical Transfer Characteristics

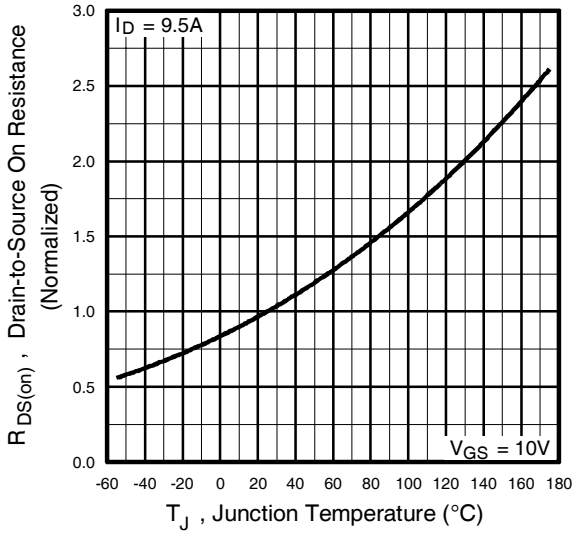

Fig 4. Normalized On-Resistance Vs. Temperature

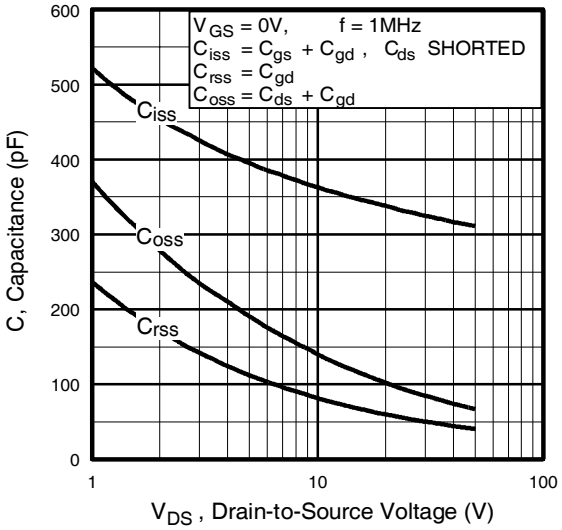

Fig 5. Typical Capacitance Vs. Drain-to-Source Voltage

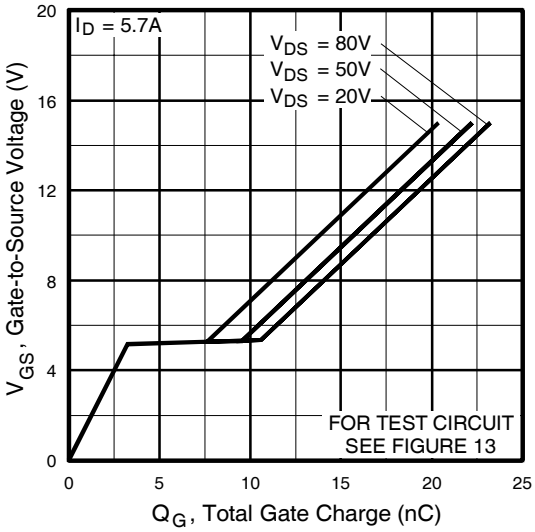

Fig 6. Typical Gate Charge Vs. Gate-to-Source Voltage

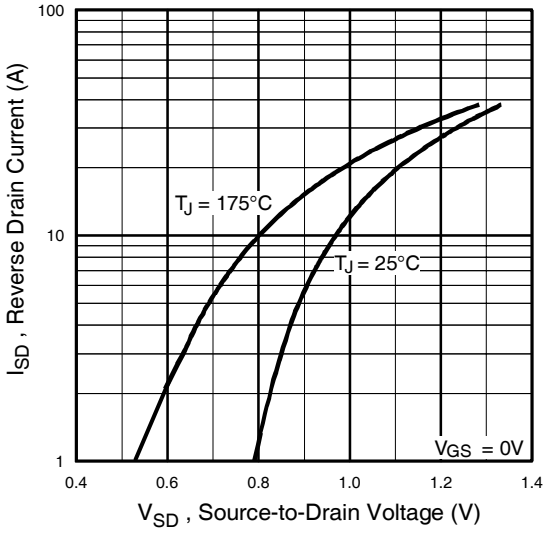

Fig 7. Typical Source-Drain Diode Forward Voltage

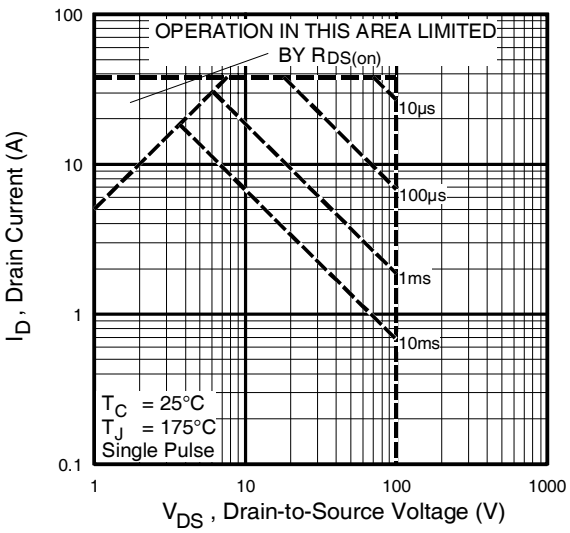

Fig 8. Maximum Safe Operating Area

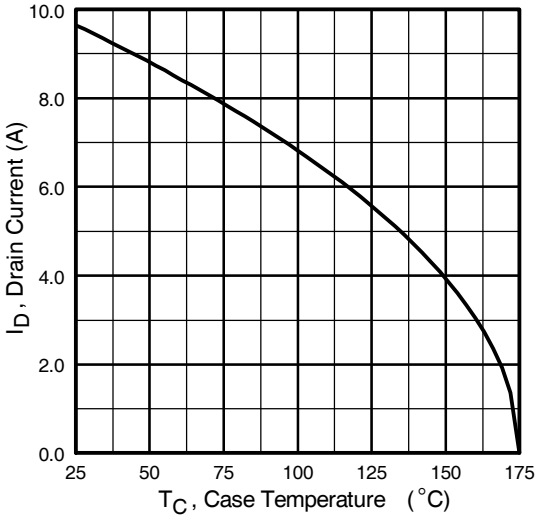

Fig 9. Maximum Drain Current Vs. Case Temperature

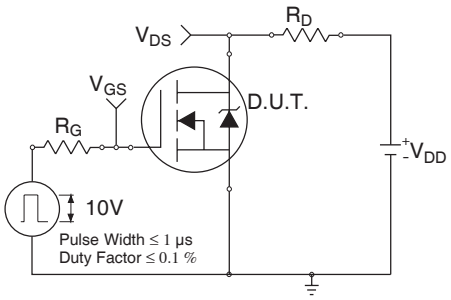

Fig 10a. Switching Time Test Circuit

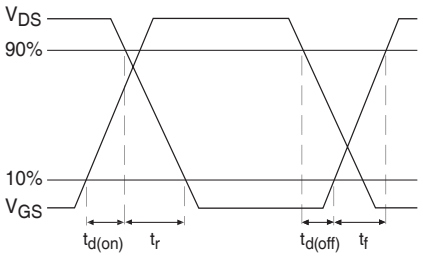

Fig 10b. Switching Time Waveforms

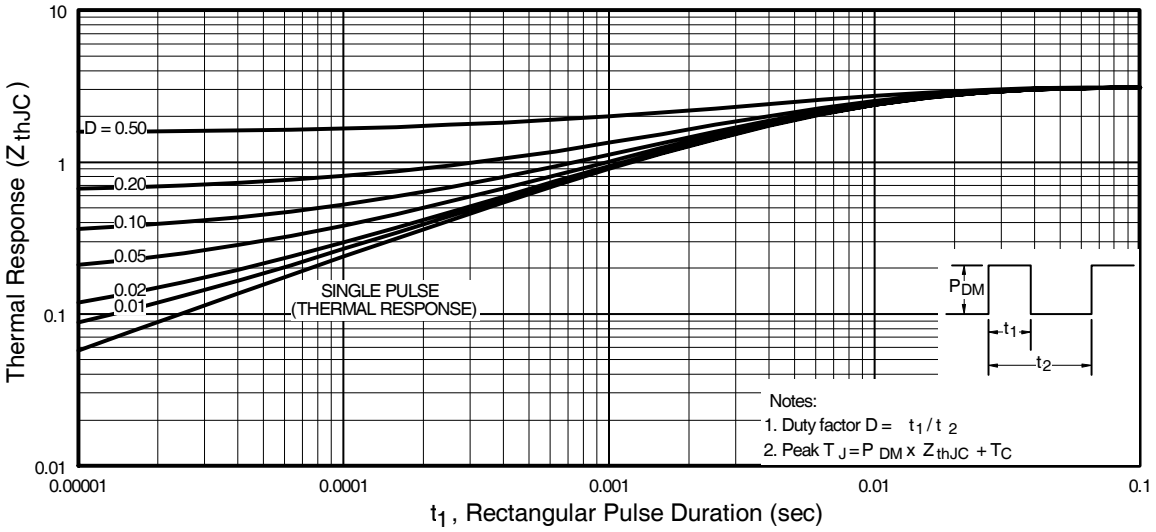

Fig 11. Maximum Effective Transient Thermal Impedance, Junction-to-Case

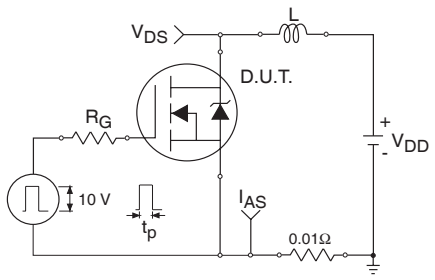

Fig 12a. Unclamped Inductive Test Circuit

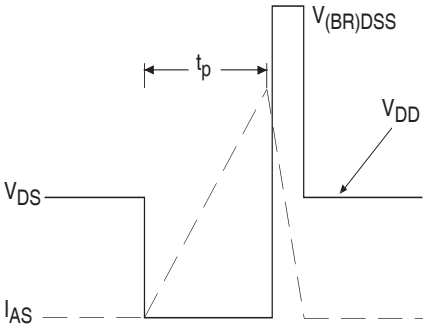

Fig 12b. Unclamped Inductive Waveforms

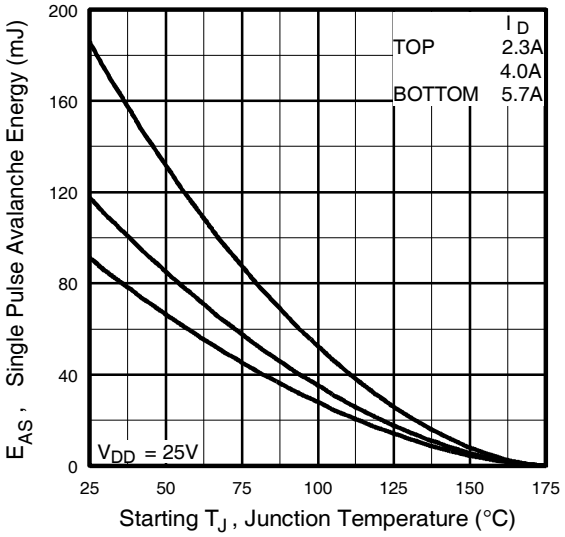

Fig 12c. Maximum Avalanche Energy Vs. Drain Current

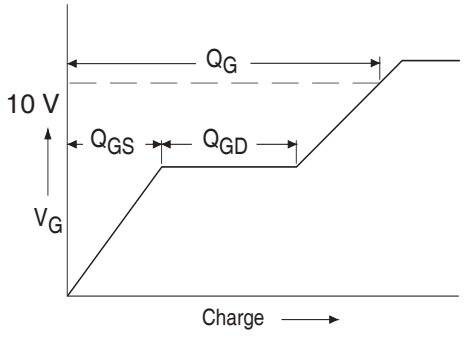

Fig 13a. Basic Gate Charge Waveform

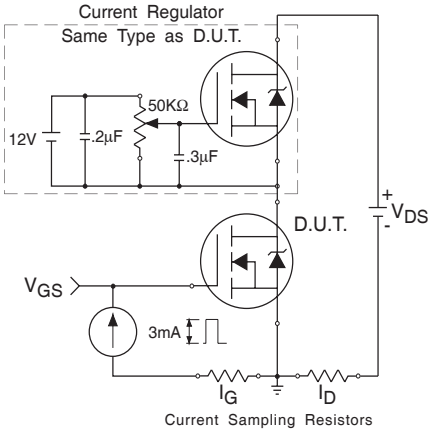

Fig 13b. Gate Charge Test Circuit

Peak Diode Recovery dv/dt Test Circuit

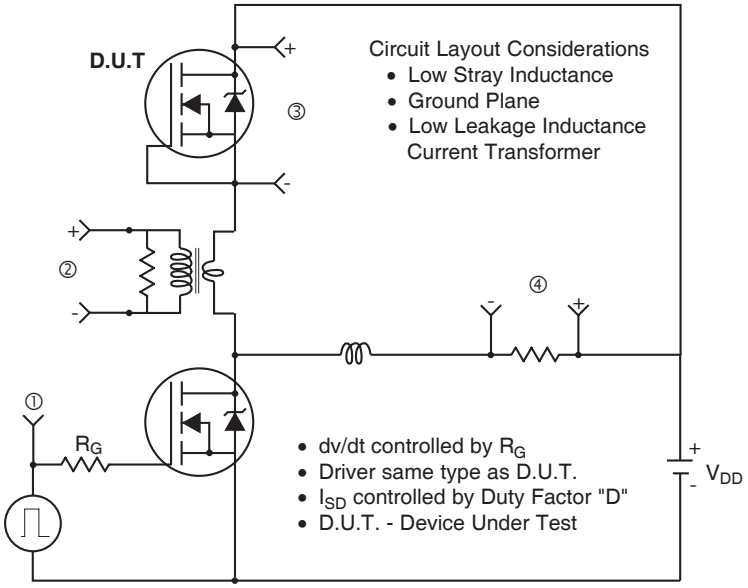

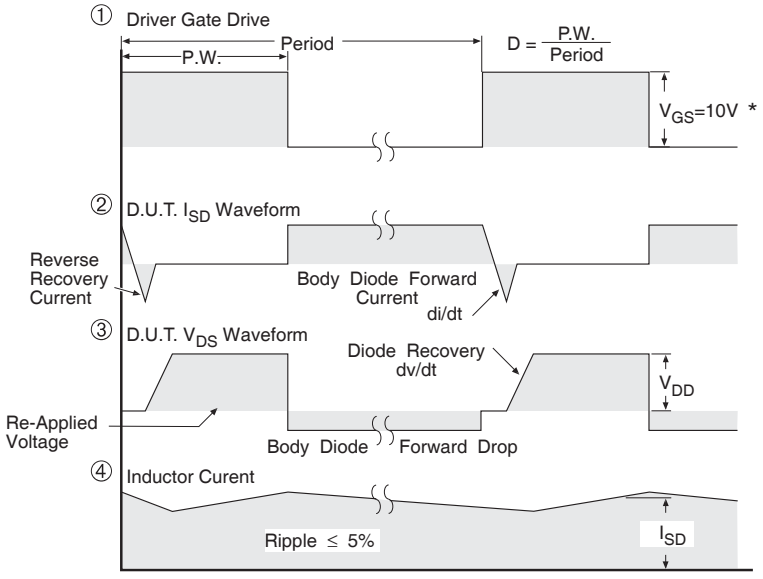

* V_{GS} = 5V for Logic Level Devices

Fig 14. For N-Channel HEXFETS

TO-220AB Package Outline

Dimensions are shown in millimeters (inches)

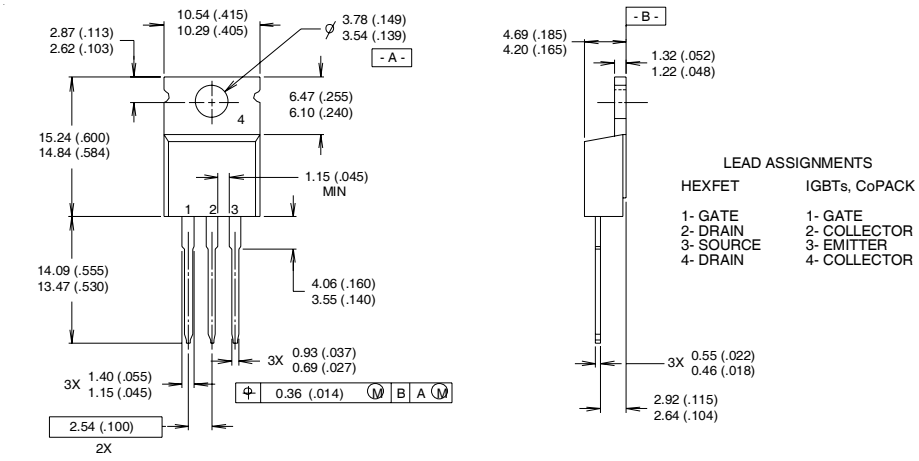

NOTES:

1 DIMENSIONING & TOLERANCING PER ANSI Y14.5M, 1982.
2 CONTROLLING DIMENSION : INCH
3 OUTLINE CONFORMS TO JEDEC OUTLINE TO-220AB.
4 HEATSINK & LEAD MEASUREMENTS DO NOT INCLUDE BURRS.

TO-220AB Part Marking Information

EXAMPLE: THIS IS AN IRF1010
LOT CODE 1789
ASSEMBLED ON WW 19, 1997
IN THE ASSEMBLY LINE "C"

Note: "P" in assembly line position indicates "Lead-Free"

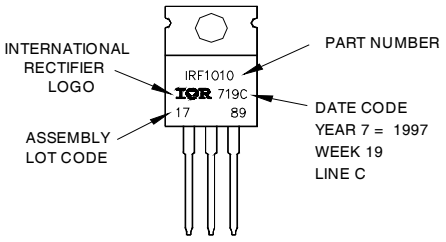

Data and specifications subject to change without notice.

International
IOR Rectifier

IR WORLD HEADQUARTERS: 233 Kansas St., El Segundo, California 90245, USA Tel: (310) 252-7105
TAC Fax: (310) 252-7903
Visit us at www.irf.com for sales contact information.11/03

Note: For the most current drawings please refer to the IR website at:
http://www.irf.com/package/

IMPORTANT NOTICE

The information given in this document shall in no event be regarded as a guarantee of conditions or characteristics ("Beschaffenheitsgarantie") .

With respect to any examples, hints or any typical values stated herein and/or any information regarding the application of the product, Infineon Technologies hereby disclaims any and all warranties and liabilities of any kind, including without limitation warranties of non-infringement of intellectual property rights of any third party.

In addition, any information given in this document is subject to customer's compliance with its obligations stated in this document and any applicable legal requirements, norms and standards concerning customer's products and any use of the product of Infineon Technologies in customer's applications.

The data contained in this document is exclusively intended for technically trained staff. It is the responsibility of customer's technical departments to evaluate the suitability of the product for the intended application and the completeness of the product information given in this document with respect to such application.

For further information on the product, technology, delivery terms and conditions and prices please contact your nearest Infineon Technologies office (**www.infineon.com**).

WARNINGS

Due to technical requirements products may contain dangerous substances. For information on the types in question please contact your nearest Infineon Technologies office.

Except as otherwise explicitly approved by Infineon Technologies in a written document signed by authorized representatives of Infineon Technologies, Infineon Technologies' products may not be used in any applications where a failure of the product or any consequences of the use thereof can reasonably be expected to result in personal injury.

Unikeyic Electronics

Global Electronic Components Distributor

Click to view pricing, inventory, delivery, and lifecycle information:

International Rectifier:

AUIRL1404STRL IR2235PBF IRG7PH44K10D-EPBF IRS21094PBF IRS2330DJPBF IRS2332JPBF AUIRF3805L IR2113SPBF IRF2805PBF IRGP20B120UD-EP IRS2128STRPBF IRS2181PBF AUIRFR2905ZTR IR21064PBF IRFH7936TRPBF AUIRB24427STR-IR AUIRFB4610 AUIRFU8403-701TRL AUIRLR024Z IRGP6630D-EPBF IRS2184PBF AUIRF1324STRL AUIRF2807 AUIRFR120Z AUIRGPS4070D0 FP30R06W1E3B11BOMA1 IRAM136-1061A2-IR SP001547270 IRGP4760-EPBF PVR1300NPBF