

THE FL.SERIES RANGE, THE FIRST 12MM /13.5MM PUSH BUTTON IN THE WORLD WITH A FULLY ILLUMINATED LENS.

Available in 12mm and 13.5mm standard mounting hole sizes, a unique high brightness full face illuminated switch and a non-illuminated version as a plug-in replacement for competitor products.

Designed and manufactured in France with IP67 sealing and rugged PA6.6 polyamide construction the FL series has superb tactile feedback and vibrant single or bi-colour multi-LED illumination.

MECHANICAL

Travel	(nom)	2 mm ±0.3mm
Operating force	(nom)	5 N ±30%
Panel thickness	(max)	1 - 6 mm
Terminal type		Plug-in terminal 2.8 x 0.5
Switching action		Momentary

ELECTRICAL

Dielectric strength	2500V a.c.
Insulation resistance	1GΩ
Contact resistance	< 50mΩ

LIGHTING

Voltage	5V
Current LED	65 mA max

ENVIRONMENTAL

Ingress protection	IP67
Operating temperature range	-40°C to +85°C

MATERIALS

Body	PA 6.6
Button	PC
Contacts	Gold plated nickel
Contacts terminals	Gold plated nickel
LED terminals	Silver plated nickel

PART NUMBERS

NON-ILLUMINATED

Ø13.5	*Ø12*	*Cap*
FL13NN	FL12NN	Black
FL13NB	FL12NB	Blue
FL13NG	FL12NG	Green
FL13NO	FL12NO	Orange
FL13NR	FL12NR	Red
FL13NW	FL12NW	White
FL13NY	FL12NY	Yellow

ILLUMINATED

Ø13.5	*Ø12*	*Cap*
FL13LB5	FL12LB5	Blue
FL13LG5	FL12LG5	Green
FL13LO5	FL12LO5	Orange
FL13LR5	FL12LR5	Red
FL13LW5	FL12LW5	White
FL13LY5	FL12LY5	Yellow

DUAL-COLOR ILLUMINATED

Ø13.5	*Ø12*	*Cap*	*Illumination color*
FL13DGB5	FL12DGB5	Milky white	Green or Blue
FL13DRB5	FL12DRB5	Milky white	Red or Blue
FL13DRG5	FL12DRG5	Milky white	Red or Green

EAO Ltd
Highland House
Albert Drive
Burgess Hill
RH15 9TN
Tel 01444 236000
sales.euk@eao.com

www.eao.com



Ø13.5mm Product Drawings

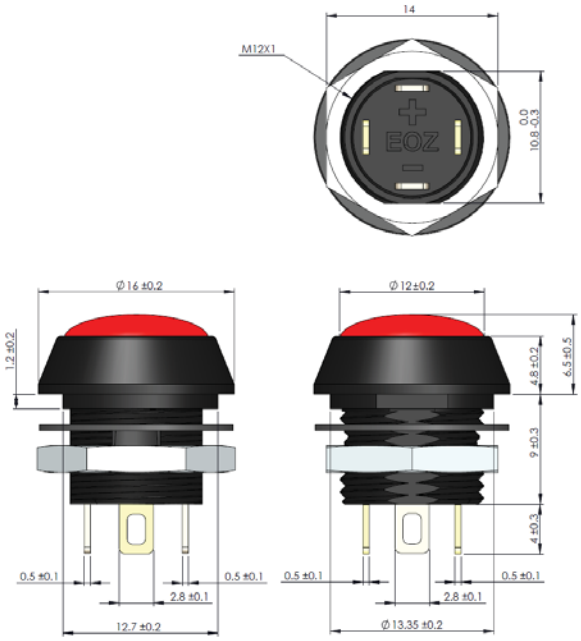

Panel Cut Out

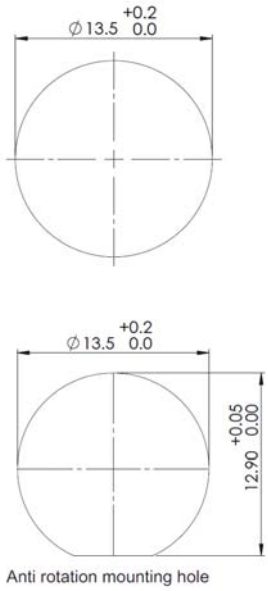

Anti rotation mounting hole

Ø12mm Product Drawings

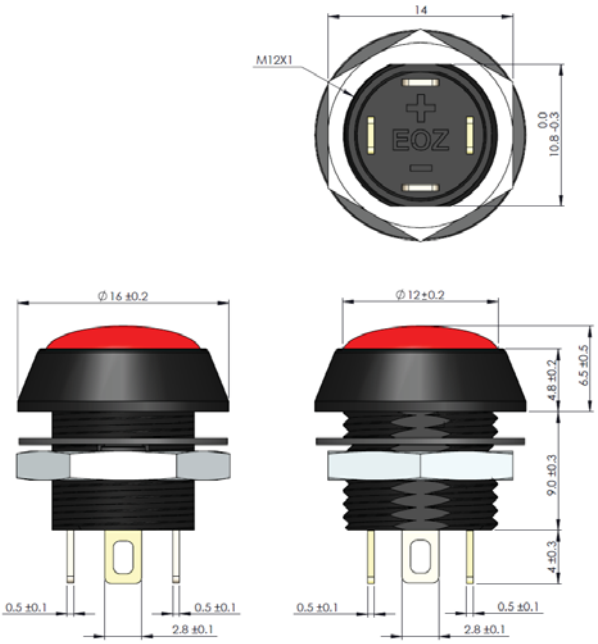

Panel Cut Out

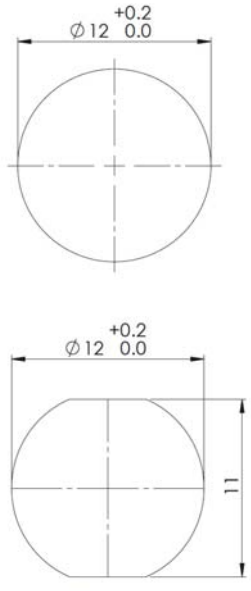

Anti rotation mounting hole

Diagram



2015 /11/UK

EOZ SOLUTIONS & COMPOSANTS

Unikeyic Electronics

Global Electronic Components Distributor

Click to view pricing, inventory, delivery, and lifecycle information:

EOZ:

S.12150.241 09.03201.02 09.10201.02 20.17292.21 20.17504.02 FL12NR 09-03290.01 09.03290.01 17.17851.30 19.03201.01 02.17013.21 S.12150.001 07.17502.21 FL12NB FL13DRG5 R19FFSSPAGRG24 20.17504.01 S.12100.241 S.16350.001 SL.12150.001 09.10290.01 17.17282.22 ECO.16250.06 FL13NN R16FRNSTAG ECO.12100.06 FL13NG R19DFNSTAG R19FFSSTAG S.12100.001