FEATURES

- Ultra Low Quiescent Power Dual output 6+1 phase PWM Controller
- Intel® VR12, VR12.5 & Memory VR modes
- Overclocking & Gaming Modes
- PVI GPU VR mode
- Switching frequency from 194kHz to 2MHz per phase in 56 steps
- IR Efficiency Shaping Features including Variable Gate Drive, Dynamic Phase Control and Automatic Power State Switching
- Programmable 1-phase or 2-phase operation for Light Loads and Active Diode Emulation for Very Light Loads
- IR Adaptive Transient Algorithm (ATA) on both loops minimizes output bulk capacitors and system cost
- Auto-Phase Detection with PID Coefficient auto-scaling
- Fault Protection: OVP, UVP, OCP, OTP, CAT FLT
- I2C/SMBus/PMBus system interface for reporting of Temperature, Voltage, Current & Power telemetry for both loops
- Multiple Time Programming (MTP) with integrated charge pump for easy non-volatile programming
- Compatible with 3.3V tri-state drivers and IR ATL mode drivers
- +3.3V supply voltage; -40°C to 85°C ambient operation
- Pb-Free, RoHS, 6x6mm 48-pin, 0.4mm pitch QFN

APPLICATIONS

- Intel® VR12 and VR12.5 based systems
- Servers and High End Desktop CPU VRs
- High Performance Graphics Processors

DESCRIPTION

The IR3581 is a dual-loop digital multi-phase buck controller designed for CPU voltage regulation, and is fully compliant with Intel® VR12 and compliant with VR12.5 Rev 1.3 PWM specifications.

The IR3581 includes IR's Efficiency Shaping Technology to deliver exceptional efficiency at minimum cost across the entire load range. IR Variable Gate Drive optimizes the MOSFET gate drive voltage based on real-time load current. IR's Dynamic Phase Control adds/drops phases based upon load current. The IR3581 can be configured to enter 1 or 2-phase operation and active diode emulation mode automatically or by command.

IR's unique Adaptive Transient Algorithm (ATA), based on proprietary non-linear digital PWM algorithms, minimizes output bulk capacitors.

IR3581 has 127 possible address values for both the PMBus and I2C bus interfaces. The device configuration can be easily defined using the IR Digital Power Design Center (DPDC) GUI, and is stored in the on-chip Non-Volatile Memory (NVM). This reduces external components and minimizes the package size.

The IR3581 provides extensive OVP, UVP, OCP, OTP & CAT FLT fault protection, and includes thermistor based temperature sensing or per phase temperature reporting when using the IR powIRstage. The controller is designed to work with either Rdson current sense PowIRstages or with DCR current sense.

The IR3581 also includes numerous VR design simplifying and differentiating features, like register diagnostics, which enable fast time-to-market.

ORDERING INFORMATION

Base Part Number	Package Type	Standard Pack		Orderable Part Number
		Form	Quantity	
IR3581	48-pin, QFN 6 mm x 6 mm	Tape and Reel	3000	IR3581MxxyyTRP[1]
IR3581	48-pin, QFN 6 mm x 6 mm	Tape and Reel	3000	IR3581MTRPBF
IR3581	48-pin, QFN 6 mm x 6 mm	Tray	4900	IR3581MTYPBF

Notes:

1. Customer Specific Configuration File, where xx = Customer ID and yy = Configuration File (Codes assigned by IR Marketing).-

ORDERING INFORMATION

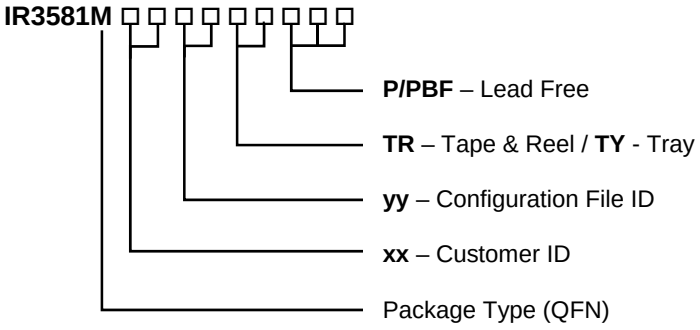

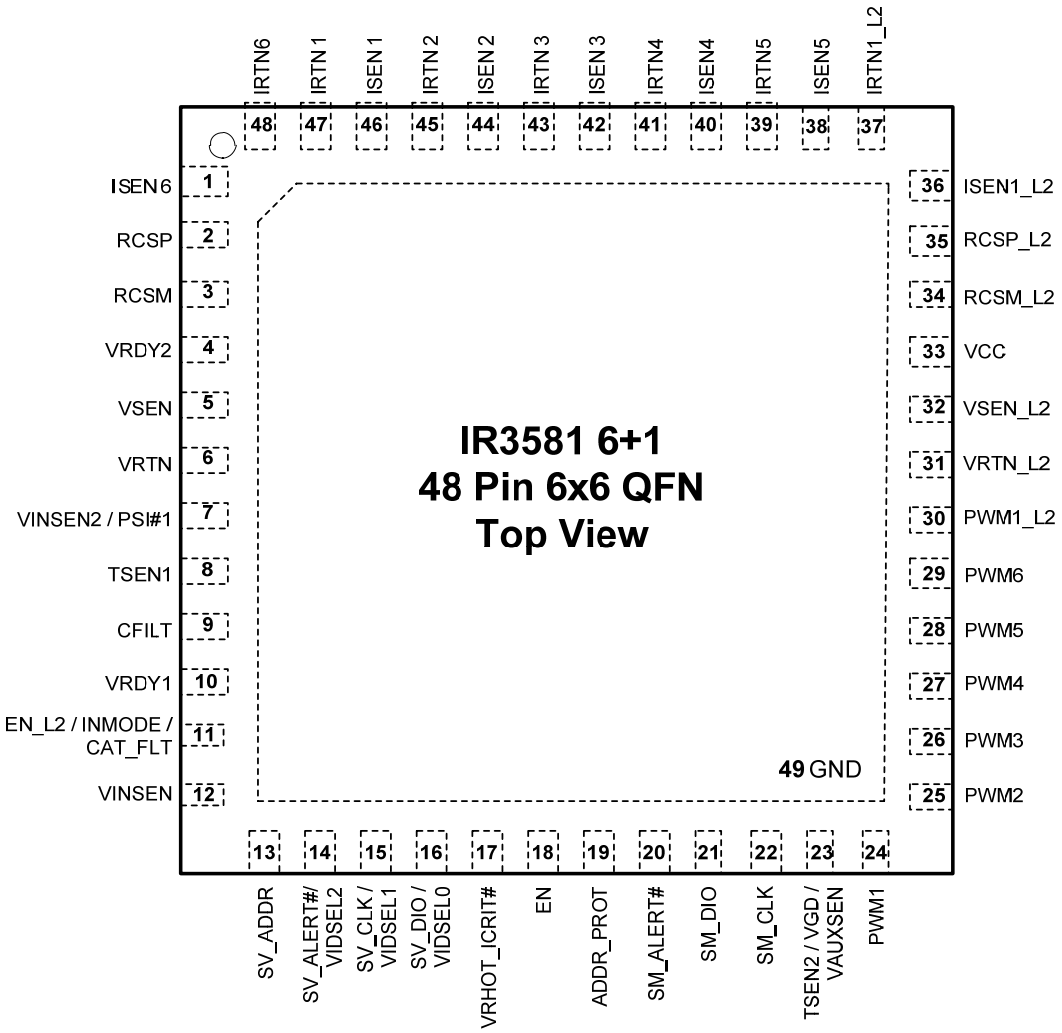

Figure 1: IR3581 Pin Diagram

FUNCTIONAL BLOCK DIAGRAM

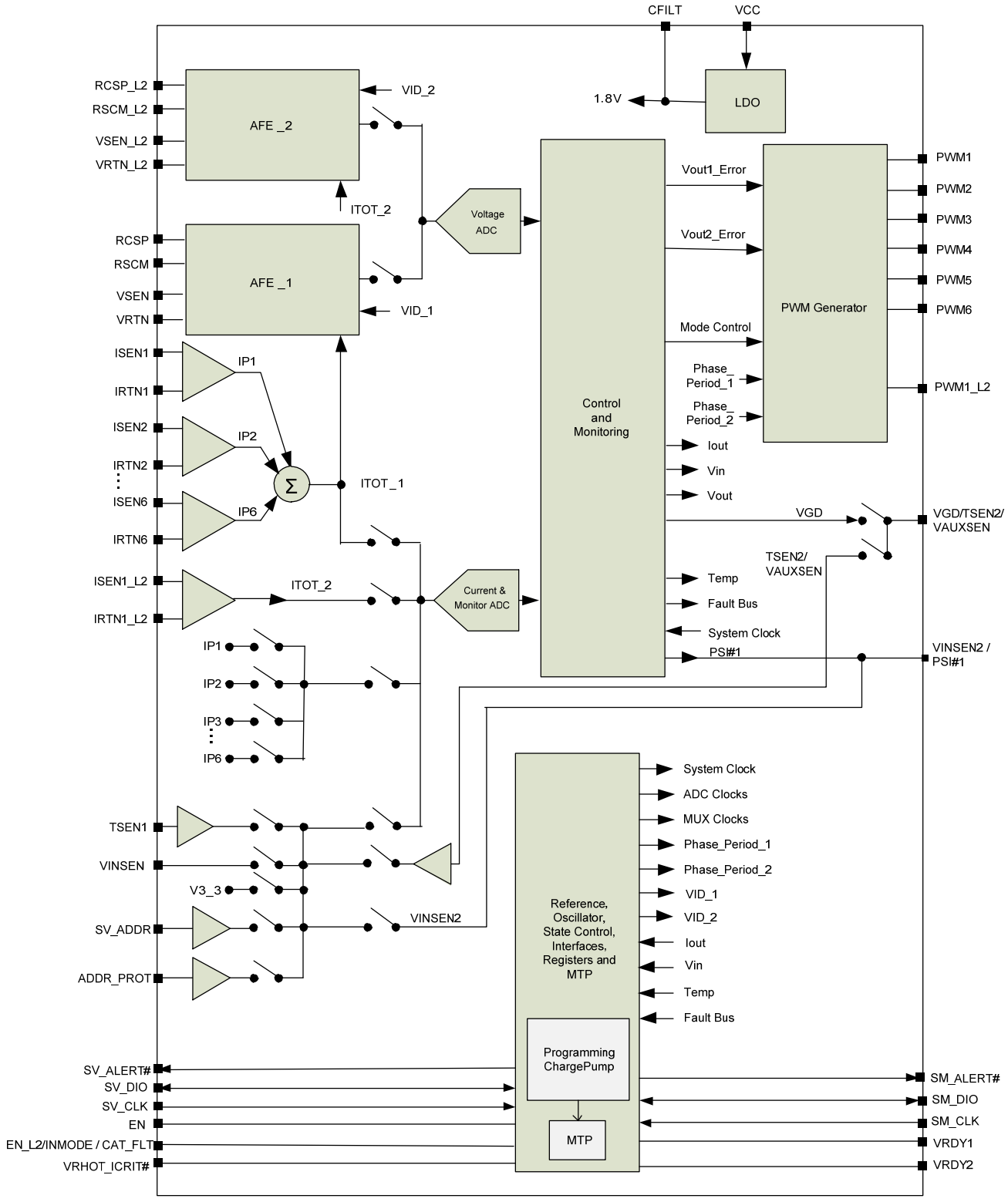

Figure 2: IR3581 Block Diagram

TYPICAL APPLICATION DIAGRAM

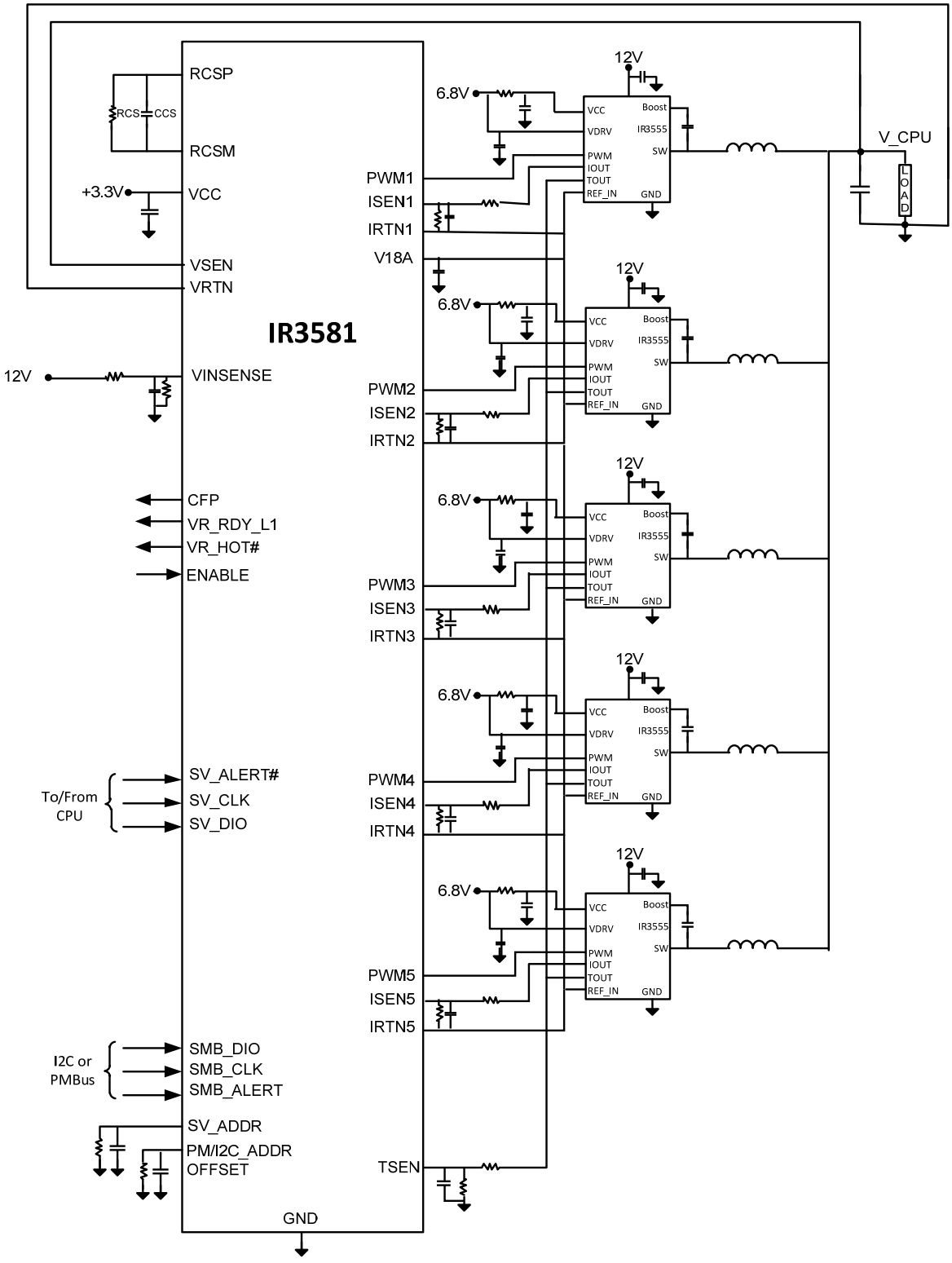

Figure 3: VR using IR3581 Controller and IR3555 PowIRstages in a 5 phase configuration

Data and specifications subject to change without notice.
This product will be designed and qualified for the Industrial market.
Qualification Standards can be found on IR's Web site.

International
IOR Rectifier

IR WORLD HEADQUARTERS: 233 Kansas St., El Segundo, California 90245, USA Tel: (310) 252-7105
TAC Fax: (310) 252-7903
Visit us at www.irf.com for sales contact information.
www.irf.com

Unikeyic Electronics

Global Electronic Components Distributor

Click to view pricing, inventory, delivery, and lifecycle information:

International Rectifier:

IR21064PBF IRFH7936TRPBF IRG7PH44K10D-EPBF AUIRF3805L AUIRFR2905ZTR AUIRL1404STRL AUIRF1324STRL IRS2332JPBF SP001547270 FP30R06W1E3B11BOMA1 IRS21094PBF PVR1300NPBF IR2113SPBF IRF2805PBF IRGP20B120UD-EP IRGP4760-EPBF IRS2184PBF IRS2330DJPBF IRAM136-1061A2-IR AUIRF2807 AUIRGPS4070D0 IRGP6630D-EPBF AUIRB24427STR-IR AUIRFU8403-701TRL AUIRLR024Z IR2235PBF IRS2128STRPBF IRS2181PBF AUIRFB4610 AUIRFR120Z