Rev	AWO #	Description	Date	Appr
-		RELEASED	6/7/24	

APPROVED: _____

DATE: _____ TITLE: _____

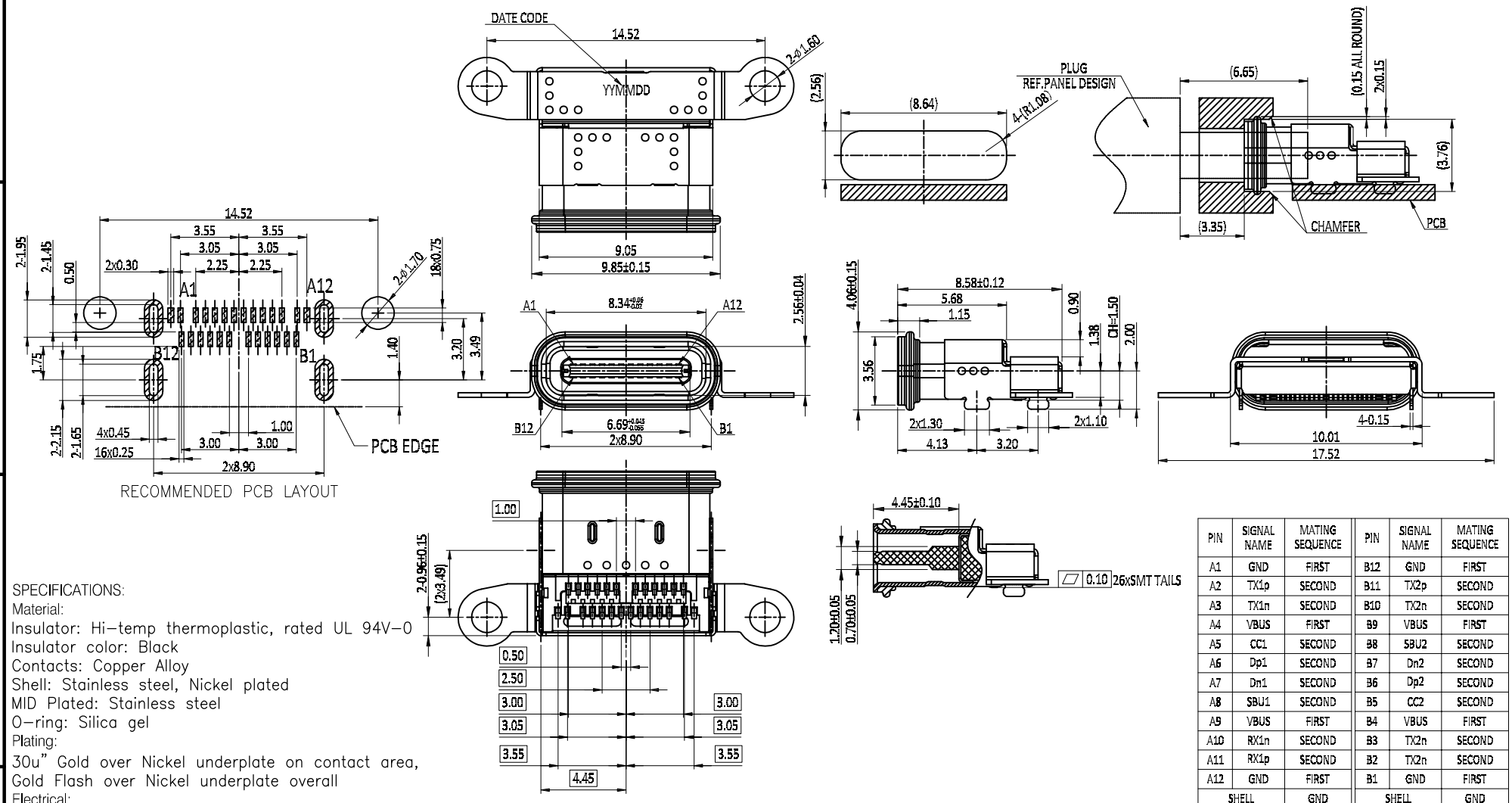

PIN	SIGNAL NAME	MATING SEQUENCE	PIN	SIGNAL NAME	MATING SEQUENCE
A1	GND	FIRST	B12	GND	FIRST
A2	TX1p	SECOND	B11	TX2p	SECOND
A3	TX1n	SECOND	B10	TX2n	SECOND
A4	VBUS	FIRST	B9	VBUS	FIRST
A5	CC1	SECOND	B8	SBU2	SECOND
A6	Dp1	SECOND	B7	Dn2	SECOND
A7	Dn1	SECOND	B6	Dp2	SECOND
A8	SBU1	SECOND	B5	CC2	SECOND
A9	VBUS	FIRST	B4	VBUS	FIRST
A10	RX1n	SECOND	B3	TX2n	SECOND
A11	RX1p	SECOND	B2	TX2n	SECOND
A12	GND	FIRST	B1	GND	FIRST
SHELL		GND	SHELL		GND

SPECIFICATIONS:

Material:

Insulator: Hi-temp thermoplastic, rated UL 94V-0

Insulator color: Black

Contacts: Copper Alloy

Shell: Stainless steel, Nickel plated

MID Plated: Stainless steel

O-ring: Silica gel

Plating:

30u" Gold over Nickel underplate on contact area, Gold Flash over Nickel underplate overall

Electrical:

Current rating: 5A

Contact resistance: 40 mohms Max

Insulation resistance: 100 Mohms min.

Dielectric withstanding: 100V AC

Mechanical:

Mating force: 5~20N

Unmated force: 8~20N

Durability: 10,000 Cycles

Temperature Rating:

Operating temperature: -20°C ~ +85°C

Environmental:

Waterproof requirement: IPX8

Lead free, RoHS compliant. RoHS COMPLIANT

PACKAGED ON TAPE & REEL

UNLESS OTHERWISE SPECIFIED ALL DIMENSIONS ARE MILLIMETERS. TOLERANCES: EXCEPT AS NOTED

	MM	ANGLE
.X	± 0.50	± 3°
.XX	± 0.15	
.XXX	± 0.10	

DRAWN	LH	6/7/24
CHECKED	RC	6/7/24
APPROVED		

THIS DRAWING CONTAINS INFORMATION THAT IS PROPRIETARY AND SHOULD NOT BE USED WITHOUT PRIOR WRITTEN PERMISSION FROM ADAM TECH

ADAM TECH
909 Rahway Avenue,
Union, NJ 07083
Phone: 908-687-5000
Fax: 908-687-5710

TITLE: UNIVERSAL SERIAL BUS, TYPE C4.0, FEMALE, 24P
TRANSMISSION EFFICIENCY: GEN3X2 40G
W/ MOUNTING FLANGE, WATERPROOF IPX8

SIZE	PART NO.	REV.
X	USB-C40-S-RA-CS68-SMT-WP-BK-30-T/R	-

REF: S00013T | SCALE: NTS | SHEET 1 OF 2

Rev	AWO #	Description	Date	Appr
SEE SHT 1 OF 2 FOR REVISION				

APPROVED: _____

DATE: _____ TITLE: _____

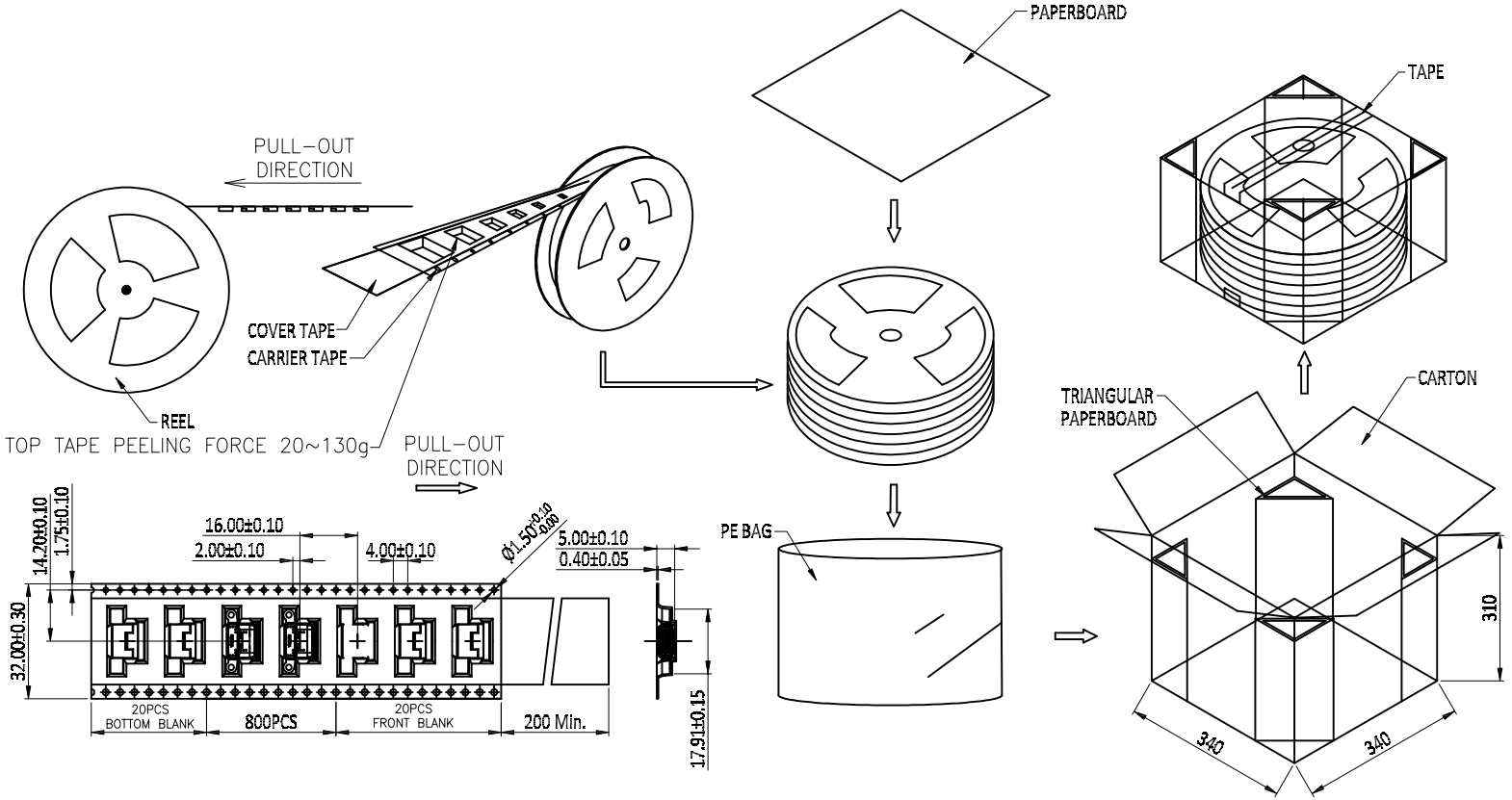

QUANITY OF PER TRAY	800PCS/REEL
QUANITY OF PER CARTON	8x800=6400PCS/CARTON
TRAY TYPE	ø330x35H
CARTON SIZE	340x340x310
PART	MATERIAL

UNLESS OTHERWISE SPECIFIED ALL DIMENSIONS ARE MILLIMETERS. TOLERANCES: EXCEPT AS NOTED

MM	ANGLE
.X ± 0.50	± 3°
.XX ± 0.15	
.XXX ± 0.10	

DRAWN	LH	6/7/24
CHECKED	RC	6/7/24
APPROVED		

THIS DRAWING CONTAINS INFORMATION THAT IS PROPRIETARY AND SHOULD NOT BE USED WITHOUT PRIOR WRITTEN PERMISSION FROM ADAM TECH

ADAM TECH
909 Rahway Avenue,
Union, NJ 07083
Phone: 908-687-5000
Fax: 908-687-5710

TITLE: UNIVERSAL SERIAL BUS, TYPE C4.0, FEMALE, 24P
TRANSMISSION EFFICIENCY: GEN3X2 40G
W/ MOUNTING FLANGE, WATERPROOF IPX8

SIZE	PART NO.	REV.
X	USB-C40-S-RA-CS68-SMT-WP-BK-30-T/R	-

REF: S00013T | SCALE: NTS | SHEET 2 OF 2