1 Product Identification

GDNRA	4020	-	2R2	M	T	F
①	②		③	④	⑤	⑥

①Product Alloy Series

② Dimensions（See two）

③ Inductance Value (2R2:2.2μH)

④ Inductance Tolerance (J:±5%;K:±10%; M:±20%; N:±30%)

⑤ Packaging Style (B: Bulk; T: Tape & Reel)

⑥ Lead Free

2 Appearance, Dimensions(mm)

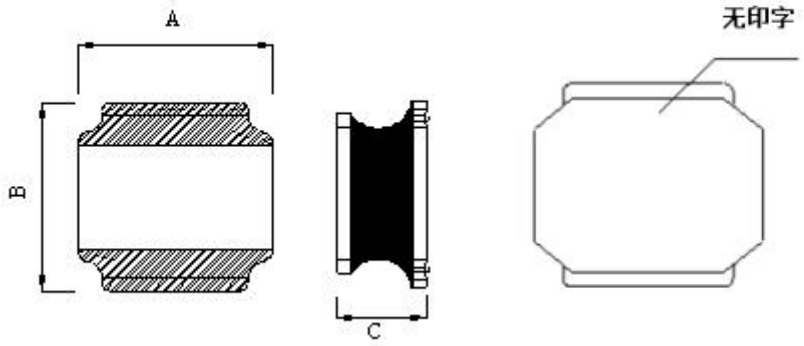

A	B	C
4.0±0.2	4.0±0.2	2.0±0.3

LAND PATTERN DIMENSIONS

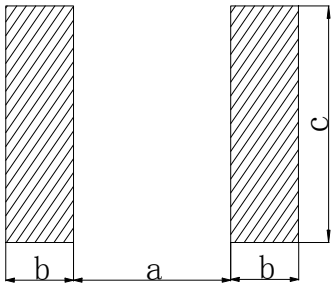

/	mm
a	1.6
b	1.25
c	3.7

3 Specifications

Part No.	Inductance L0(uH) ±20% @100KHz/1V	RDC (mΩ)Max	Saturation Current (A)Max	Heat Rating Current (A)Max
GDNRA4020-2R2MTF	2.2	56	6.1	4.3

※ Note

*Rated current is the DC current that reduces the initial inductance by 30% or when the temperature rises △ T = 40℃

4 Curve

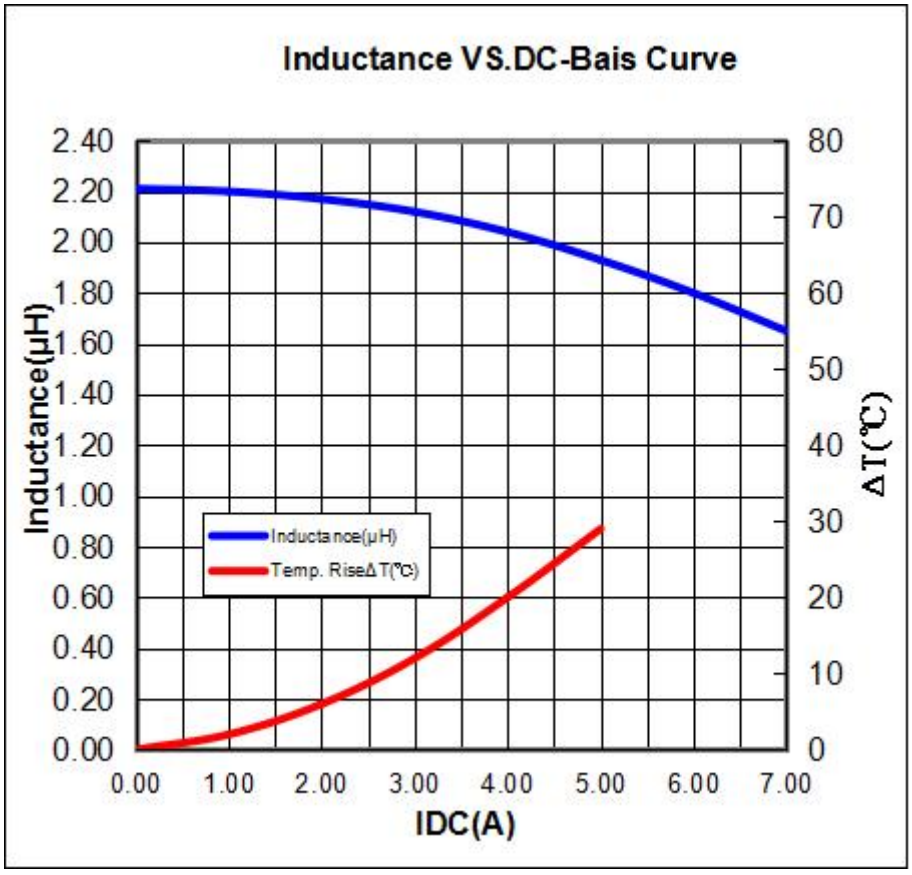

5 Packaging

(1) Dimensions of Reel（mm）

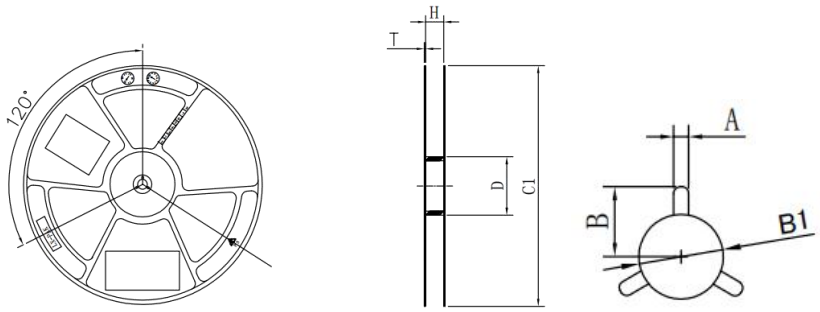

	Size（mm）
C1	330 ± 3.0
H	12.8 ± 0.5
A	2.5± 0.3
B	10.75 ± 0.3
B1	13+0.5/-0.2
T	2.0 ± 0.2
D	100±1.0

(2) Dimensions of Tape (mm):

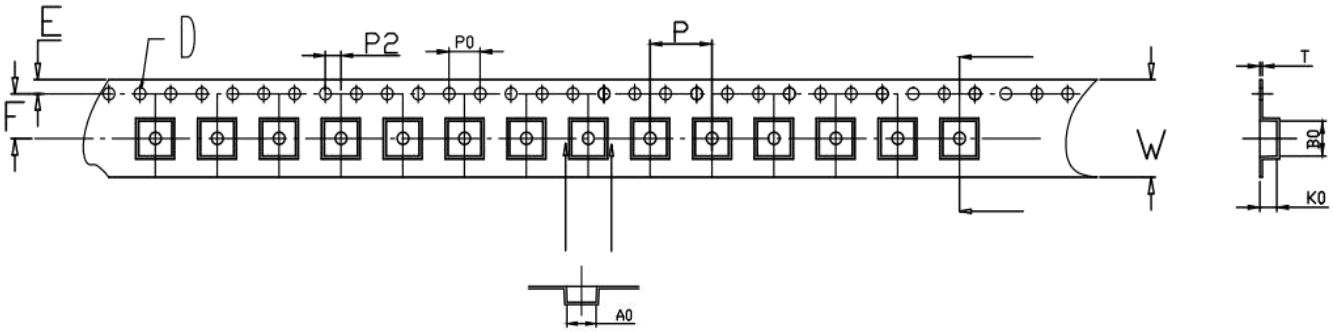

W	A0	B0	K0	P	F	E	D	P0	P2	T	Packaging quantity
12.0 ±0.3	4.5 ±0.1	4.5 ±0.1	2.2 ±0.1	8.0 ±0.1	5.5 ±0.1	1.75 ±0.1	1.5+ 0.1/-0.0	4.0 ±0.1	2.0 ±0.1	0.3 ±0.05	3000PCS/REEL