TIMKEN

The Timken Company
4500 Mt Pleasant St. NW
N. Canton, OH 44720
**Phone:** (234) 262-3000
**E-Mail:** CustomerCAD@timken.com • **Web site:** www.timken.com

## Timken Part Number LM501349 - LM501314, Tapered Roller Bearings - TS (Tapered Single) Imperial

This is the most basic and most widely used type of tapered roller bearing. It consists of two main separable parts: the cone (inner ring) assembly and the cup (outer ring). It is typically mounted in opposing pairs on a shaft.



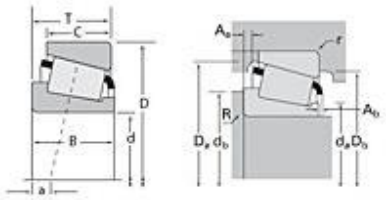


Specifications | Dimensions | Abutment and Fillet Dimensions | Basic Load Ratings | Factors

### Specifications

| | |
|---|---|
| **Series** | LM501300 |
| **Cone Part Number** | LM501349 |
| **Cup Part Number** | LM501314 |
| **Design Units** | Imperial |
| **Bearing Weight** | 0.80 lb<br>0.400 Kg |
| **Cage Type** | Stamped Steel |

### Dimensions

| | |
|---|---|
| **d - Bore** | 1.6250 in<br>41.275 mm |
| **D - Cup Outer Diameter** | 2.8910 in<br>73.431 mm |

| | |
|---|---|
| **B - Cone Width** | 0.7800 in<br>19.812 mm |
| **C - Cup Width** | 0.6537 in<br>16.604 mm |
| **T - Bearing Width** | 0.8437 in<br>21.430 mm |

## Abutment and Fillet Dimensions

| | |
|---|---|
| **R - Cone Backface "To Clear" Radius[1]** | 0.14 in<br>3.560 mm |
| **r - Cup Backface "To Clear" Radius[2]** | 0.030 in<br>0.76 mm |
| **da - Cone Frontface Backing Diameter** | 1.89 in<br>48.01 mm |
| **db - Cone Backface Backing Diameter** | 2.13 in<br>54.10 mm |
| **Da - Cup Frontface Backing Diameter** | 2.80 in<br>71.10 mm |
| **Db - Cup Backface Backing Diameter** | 2.56 in<br>65.02 mm |
| **Ab - Cage-Cone Frontface Clearance** | 0.07 in<br>1.8 mm |
| **Aa - Cage-Cone Backface Clearance** | 0.01 in<br>0.3 mm |
| **a - Effective Center Location[3]** | -0.13 in<br>-3.30 mm |

## Basic Load Ratings

| | |
|---|---|
| **C90 - Dynamic Radial Rating (90 million revolutions)[4]** | 4360 lbf<br>19400 N |
| **C1 - Dynamic Radial Rating (1 million revolutions)[5]** | 16800 lbf<br>74800 N |
| **C0 - Static Radial Rating** | 16700 lbf<br>74200 N |
| **$C_{a90}$ - Dynamic Thrust Rating (90 million revolutions)[6]** | 2980 lbf<br>13300 N |

## Factors

| | |
|---|---|
| **K - Factor[7]** | 1.46 |
| **e - ISO Factor[8]** | 0.4 |
| **Y - ISO Factor[9]** | 1.5 |
| **G1 - Heat Generation Factor (Roller-Raceway)** | 23.3 |
| **G2 - Heat Generation Factor (Rib-Roller End)** | 13.3 |
| **Cg - Geometry Factor** | 0.0739 |

[1] These maximum fillet radii will be cleared by the bearing corners.
[2] These maximum fillet radii will be cleared by the bearing corners.
[3] Negative value indicates effective center inside cone backface.
[4] Based on 90 x $10^6$ revolutions $L_{10}$ life, for The Timken Company life calculation method. $C_{90}$ and $C_{a90}$ are radial and thrust values.
[5] Based on 1 x $10^6$ revolutions $L_{10}$ life, for the ISO life calculation method.
[6] Based on 90 x $10^6$ revolutions $L_{10}$ life, for The Timken Company life calculation method. $C_{90}$ and $C_{a90}$ are radial and thrust values for a single-row, $C_{90(2)}$ is the two-row radial value.
[7] These factors apply for both inch and metric calculations. Consult your Timken representative for instruction on use.
[8] These factors apply for both inch and metric calculations. Consult your Timken representative for instruction on use.
[9] These factors apply for both inch and metric calculations. Consult your Timken representative for instruction on use.

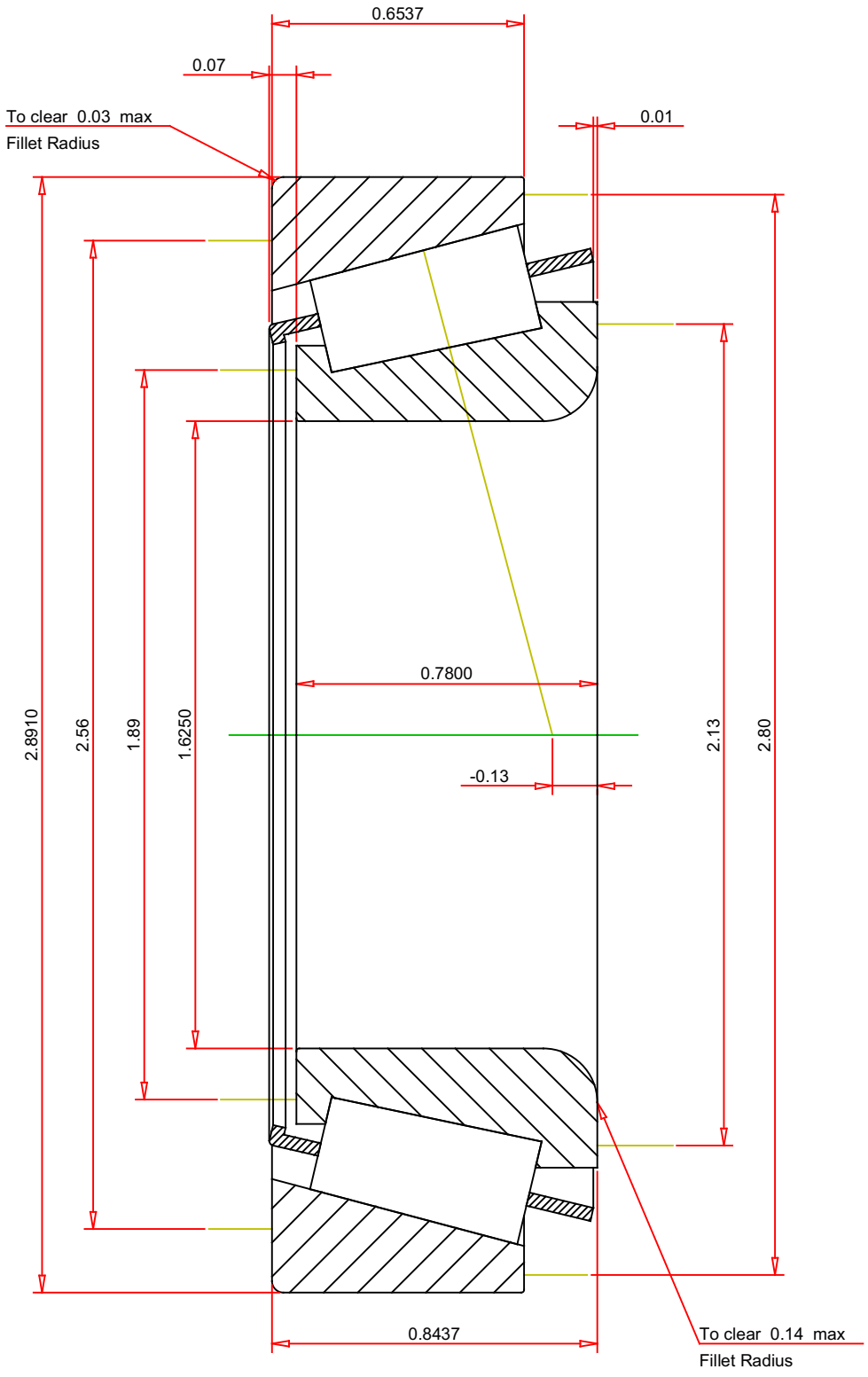


IMPERIAL UNITS

| | | |
|---|---|---|
| ISO Factor - e | 0.4 | |
| ISO Factor - Y | 1.5 | |
| Bearing Weight | 0.8 | lb |
| Number of Rollers Per Row | 19 | |
| Effective Center Location | -0.13 | inch |

TIMKEN®

THE TIMKEN COMPANY
NORTH CANTON, OHIO USA

LM501349 - LM501314
TS BEARING ASSEMBLY

| | | |
|---|---|---|
| K Factor | 1.46 | |
| Dynamic Radial Rating - C90 | 4360 | lbf |
| Dynamic Thrust Rating - Ca90 | 2980 | lbf |
| Static Radial Rating - C0 | 16700 | lbf |
| Dynamic Radial Rating - C1 | 16800 | lbf |

Every reasonable effort has been made to ensure the accuracy of the information contained in this writing, but no liability is accepted for errors, omissions or for any other reason.

FOR DISCUSSION ONLY

# Unikeyic Electronics

Global Electronic Components Distributor

Click to view pricing, inventory, delivery, and lifecycle information:

## TIMKEN:

25577/25523 3578/3525 M84548/M84510 15100/15245 21075/21212 30306 30304 32010X 368A/362A LM29749/LM29710 25580/25520 30208 32008X 32306 LM67000LA/LM67048/LM67010 M12649/M12610 M88043/M88010 32006X 32213 L68149/L68111 LM501349/LM501310 07097/07196 32005X 32014X 30307 32012X 32209 32210 07100/07210X 1380/1329