PART NUMBER	ENGINEERING NO.	LENGTH
1300240146	DNB01A-M010	3' 3" +2.19 - 0 [1.0M +55.6 - 0]
1300240149	DNB01A-M030	9' 10" +3.50 - 0 [3.0M +88.9 - 0]
1300240151	DNB01A-M050	16' 5" +6.50 - 0 [5.0M +165.1 - 0]

Ⓑ PART NO. LEGEND

DNB01A-M010

FINISHED LENGTH
M005= 0.5 METER
M010= 1 METER
M100= 10 METERS

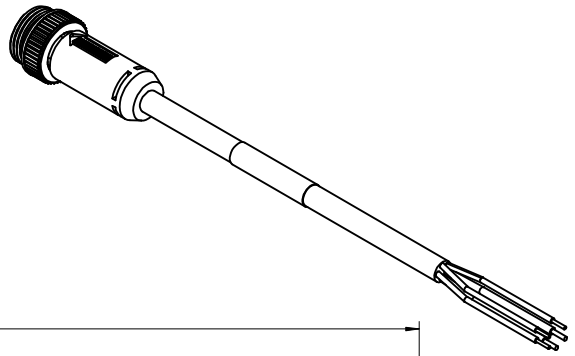

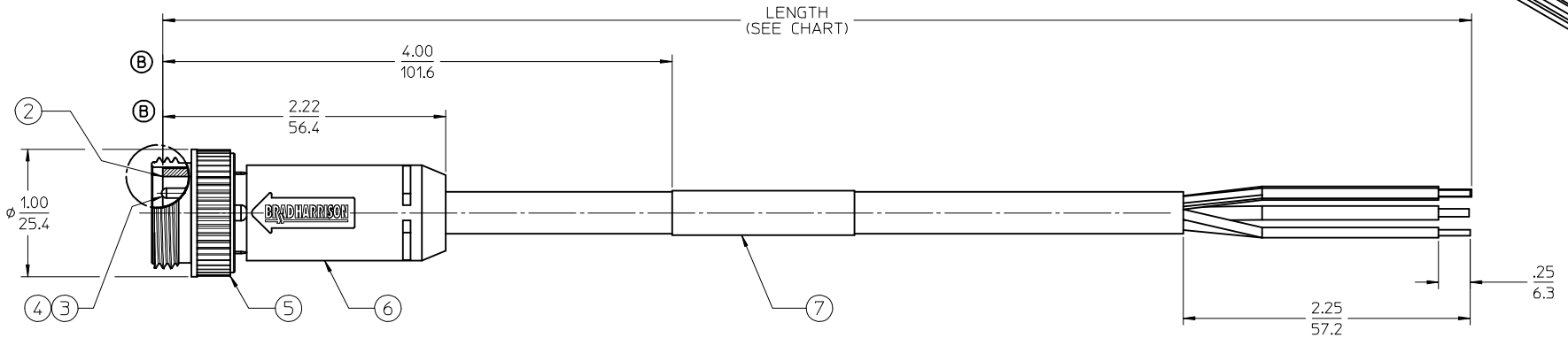

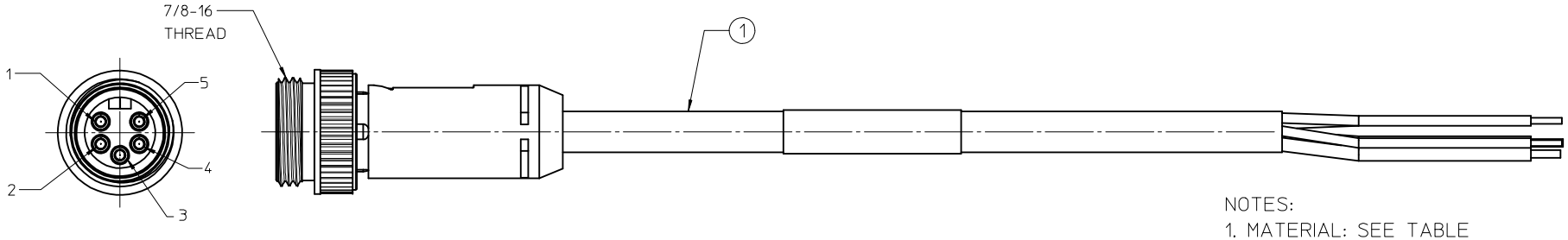

P1

1	DRAIN
2	RED +V
3	BLACK -V
4	WHITE CAN H
5	BLUE CAN L

WIRING DIAGRAM

NOTES:
1. MATERIAL: SEE TABLE
2. FINISHES: SEE TABLE
3. ELECTRICAL SPECIFICATIONS
   VOLTAGE RATING: 300V
   CURRENT RATING: 4 AMPS
4. PROTECTION: IP67 (WHEN MATED)
5. TEMP RANGE:-20°C TO +80°C
6. DIMS ARE FOR REFERENCE UNLESS NOTED OTHERWISE

TABLE

ITEM	QTY.	DESCRIPTION	MATERIAL	FINISH
7	1	LABEL	VINYL	BLACK/YELLOW
6	1	OVERMOLD	PVC	GRAY
5	1	COUPLING NUT	ZINC DIE CAST	BLACK
4	3	CONTACT PIN, 20 AWG	BRASS	GOLD PLATED
3	2	CONTACT PIN, 16 AWG	BRASS	GOLD PLATED
2	1	INSERT, MALE, 5 POLE	PVC	GRAY
1	1	CABLE - MID, DEV-NET, MID, 20/2, 16/2	PVC JACKET	GRAY

REV	DESCRIPTION
B	2.22 WAS 2.75, 4.00 WAS 12.00, ADD P/N LEGEND EC NO: IPG2017-0621 2016/12/20 DRWN:RSTONE 2016/12/22 CHKD:M ZIELINSKI 2017/01/04 APPR:BWOODMAN

QUALITY SYMBOLS
▼=0
▽=0

GENERAL TOLERANCES (UNLESS SPECIFIED)

	mm	INCH
4 PLACES	± ---	± ---
3 PLACES	± ---	± ---
2 PLACES	± ---	± ---
1 PLACE	± ---	± ---
ANGULAR ±---°		

DRAFT WHERE APPLICABLE MUST REMAIN WITHIN DIMENSIONS

DIMENSION STYLE: IN/MM
SCALE: 1.5:1
DESIGN UNITS: INCH
THIRD ANGLE PROJECTION

DRAWN BY: RSTONE DATE: 2016/12/20
CHECKED BY: M ZIELINSKI DATE: 2016/12/22
APPROVED BY: DATE:

TITLE: MINI-CHANGE 5 POLE, MALE DEV-NET CORD ASSEMBLY MID CABLE

molex MOLEX INCORPORATED

MATERIAL NO.: SEE CHART
DOCUMENT NO.: SD-130024-005
SHEET NO.: 1 OF 1
SIZE: C

THIS DRAWING CONTAINS INFORMATION THAT IS PROPRIETARY TO MOLEX INCORPORATED AND SHOULD NOT BE USED WITHOUT WRITTEN PERMISSION

Unikeyic Electronics

Global Electronic Components Distributor

Click to view pricing, inventory, delivery, and lifecycle information:

molex:

0351510214 347928042 502585-0370 347910140 355240920 502584-0870 0477256010 349672001 528520870 5023860371 194290026 351820290 357470310 502380-0800 528523070 0464363133 194290039 197134001 347072012 348268126 464373005 348242245 0194360214 528061110 502584-1060 503988100 194270031 197054301 34708-2028 459850483