RB510SM-30T2R
SCHOTTKY BARRIER DIODE

Features
Small surface mounting type.

Low reverse current and low forward voltage.

High reliability.



SOD-523



Package Marking and Ordering Information

Product ID	Pack	Marking	Qty(PCS)
RB510SM-30T2R	SOD-523	C	3000

Maximum Ratings (Ta=25°C unless otherwise noted)

Symbol	Parameter	Value	Unit
V_R	DC reverse voltage	30	V
I_o	Mean rectifying current	200	mA
I_{FSM}	Non-repetitive Peak Forward Surge Current@8.3mS	1000	mA
P_d	Power Dissipation	150	mW
$R_{\Theta JA}$	Thermal Resistance From Junction To Ambient	667	°C/W
T_J	Operation Junction Temperature Range	-40~+125	°C
T_{STG}	Storage Temperature Range	-55~+150	°C

Electrical Characteristics (Ta=25°C unless otherwise noted)

Symbol	Parameter	Test conditions	Min	Typ	Max	Unit
I_R	Reverse voltage leakage current	V_R=10V			30	μA
V_F(1)	Forward voltage	I_F=10mA			0.35	V
V_F(2)		I_F=200mA			0.50	V

Typical Characteristics

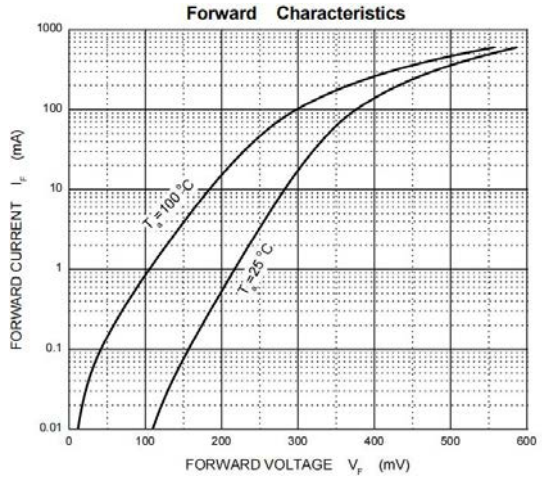

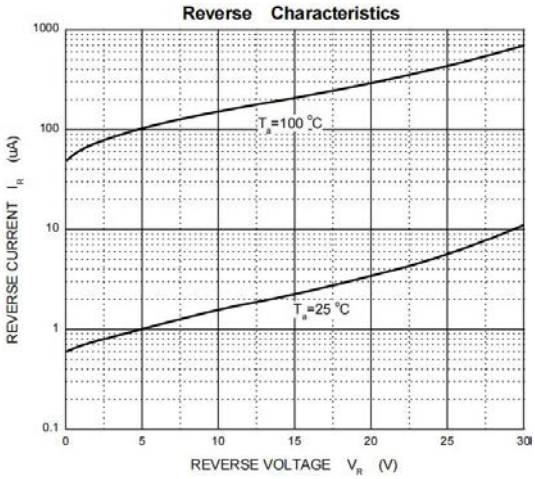

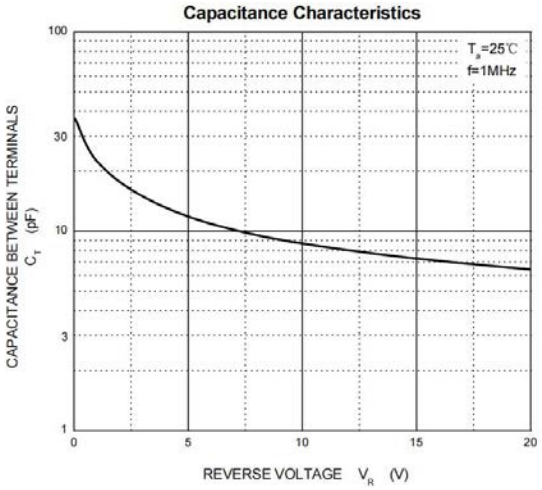

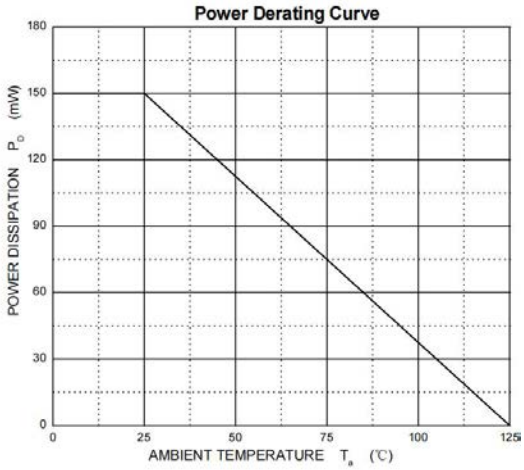

SOD-523 Package Outline Dimensions

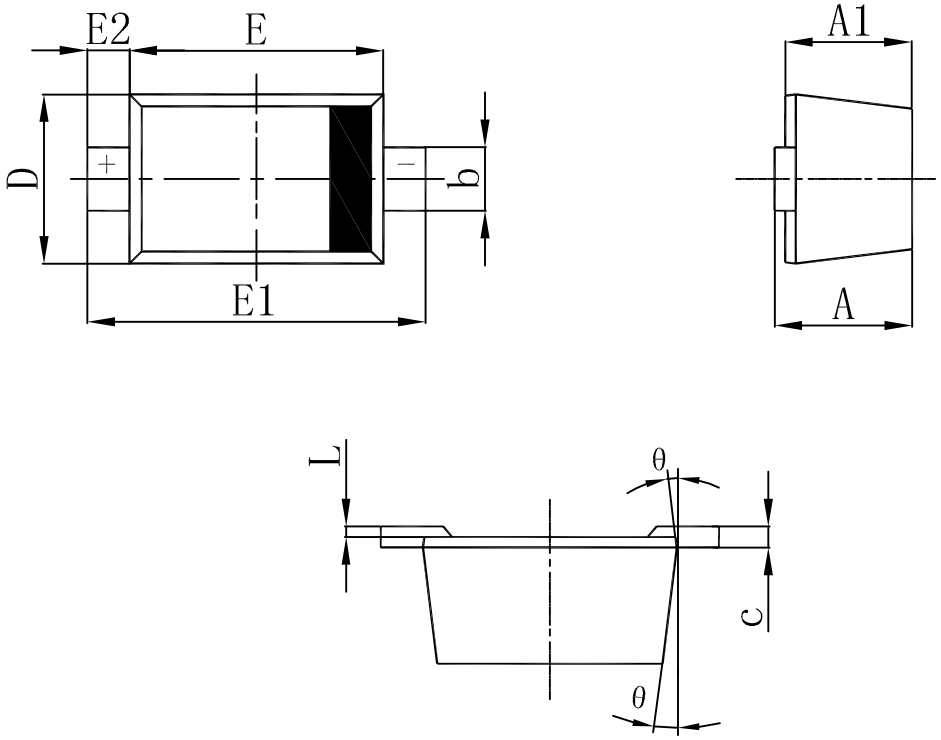

Sym ol	imensions In Millimeters		imensions In Inches	
	Min	Max	Min	Max
A	0.510	0.770	0.020	0.031
A1	0.500	0.700	0.020	0.028
b	0.250	0.350	0.010	0.014
c	0.080	0.150	0.003	0.006
D	0.750	0.850	0.030	0.033
E	1.100	1.300	0.043	0.051
E1	1.500	1.700	0.059	0.067
E2	0.200 REF		0.008 REF	
L	0.010	0.070	0.001	0.003
θ	7° REF		7° REF	

Attention

■ Any and all HUA XUAN YANG ELECTRONICS products described or contained herein do not have specifications that can handle applications that require extremely high levels of reliability, such as life-support systems, aircraft's control systems, or other applications whose failure can be reasonably expected to result in serious physical and/or material damage. Consult with your HUA XUAN YANG ELECTRONICS representative nearest you before using any HUA XUAN YANG ELECTRONICS products described or contained herein in such applications.

■ HUA XUAN YANG ELECTRONICS assumes no responsibility for equipment failures that result from using products at values that exceed, even momentarily, rated values (such as maximum ratings, operating condition ranges, or other parameters) listed in products specifications of any and all HUA XUAN YANG ELECTRONICS products described or contained herein.

■ Specifications of any and all HUA XUAN YANG ELECTRONICS products described or contained herein stipulate the performance, characteristics, and functions of the described products in the independent state, and are not guarantees of the performance, characteristics, and functions of the described products as mounted in the customer's products or equipment. To verify symptoms and states that cannot be evaluated in an independent device, the customer should always evaluate and test devices mounted in the customer's products or equipment.

■ HUA XUAN YANG ELECTRONICS CO.,LTD. strives to supply high-quality high-reliability products. However, any and all semiconductor products fail with some probability. It is possible that these probabilistic failures could
give rise to accidents or events that could endanger human lives, that could give rise to smoke or fire, or that could cause damage to other property. When designing equipment, adopt safety measures so that these kinds of accidents or events cannot occur. Such measures include but are not limited to protective circuits and error prevention circuits for safe design, redundant design, and structural design.

■ In the event that any or all HUA XUAN YANG ELECTRONICS products(including technical data, services) described or contained herein are controlled under any of applicable local export control laws and regulations, such products must not be exported without obtaining the export license from the authorities concerned in accordance with the above law.

■ No part of this publication may be reproduced or transmitted in any form or by any means, electronic or mechanical, including photocopying and recording, or any information storage or retrieval system, or otherwise, without the prior written permission of HUA XUAN YANG ELECTRONICS CO.,LTD.

■ Information (including circuit diagrams and circuit parameters) herein is for example only ; it is not guaranteed for volume production. HUA XUAN YANG ELECTRONICS believes information herein is accurate and reliable, but no guarantees are made or implied regarding its use or any infringements of intellectual property rights or other rights of third parties.

■ Any and all information described or contained herein are subject to change without notice due to product/technology improvement, etc. When designing equipment, refer to the "Delivery Specification" for the HUA XUAN YANG ELECTRONICS product that you intend to use.

Unikeyic Electronics

Global Electronic Components Distributor

Click to view pricing, inventory, delivery, and lifecycle information:

HXY MOSFET:

AQ15C-01FTG AZ4007-01H HACPDQC5V0-HF HAZ4007-01H PESDNC2XD5VBF HLY323BC1524L PESDSC2FD5VU PJEC5V0M1FN2 HESD36VD3B 60N06 HSD15C.TCT PESDNC2XD5VBL ESD5LM5.0C-HXY HCEZ36V,L3F HPTVSUC3D5VB HRCLAMP3371ZCTFT PESDLC2FD3V3BH ESD5L5.0C-HXY TPSMB28A-VR HSG3D15B3.3MA LM393DR-HXY PJSD24CW_R1 RLSD32A121V AZ4836-01L BV05C-H HSEN3611D3 HSTS521050B331 TPSMB100CA-VR HESDSLC3V3D3B HSEN2411D3