CUSTOMER TERMINAL	RoHS	LEAD(Pb)−FREE
Sn96%, Ag4%	Yes	Yes

more than you expect

WÜRTH ELEKTRONIK

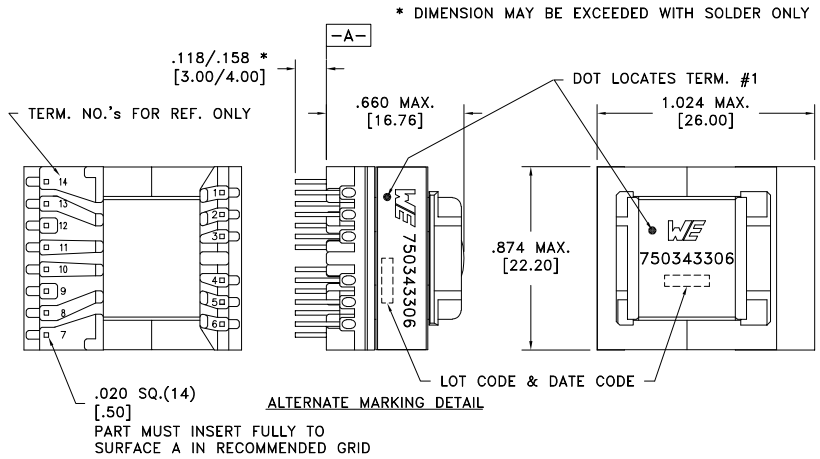

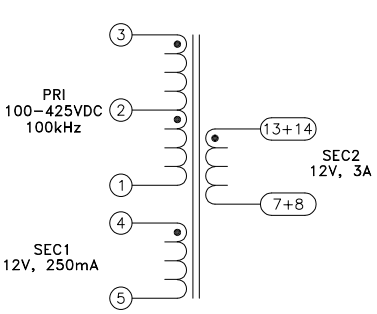

Customer to tie terminals 7+8 and 13+14 on PC board.

Application of the transformer allows for the leadwires between terminals 7&8 and 13&14 to solder bridge.

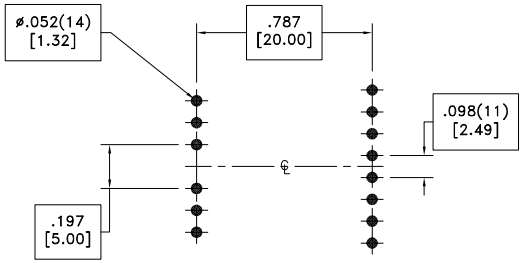

RECOMMENDED
P.C. PATTERN, COMPONENT SIDE

ELECTRICAL SPECIFICATIONS @ 25°C unless otherwise noted:

PARAMETER		TEST CONDITIONS	VALUE
D.C. RESISTANCE	3−1	@20°C	0.336 ohms max.
D.C. RESISTANCE	4−5	@20°C	0.188 ohms max.
D.C. RESISTANCE	14−8	tie(7+8, 13+14), @20°C	0.012 ohms max.
INDUCTANCE	3−1	10kHz, 100mVAC, Ls	360.0uH ±10%
SATURATION CURRENT	3−1	20% rolloff from initial	1.55A
LEAKAGE INDUCTANCE	3−1	tie(4 thru 14), 100kHz, 100mVAC, Ls	5uH typ., 8uH max.
DIELECTRIC	1−14	tie(3+4, 7+8), 3750VAC, 1 second	−
DIELECTRIC	14−Core	tie(7+8), 3750VAC, 1 second	−
(6B) TURNS RATIO		(3−1):(4−5)	9.5:1
(6B) TURNS RATIO		(3−1):(14−7), tie(7+8, 13+14)	9.5:1

GENERAL SPECIFICATIONS:

OPERATING TEMPERATURE RANGE: −40°C to +125°C including temp rise.

(6B) Designed to comply with the following requirements as defined by IEC62368−1, EN62368−1, UL62368−1/CSA62368−1 and AS/NZS62368.1:
- Reinforced insulation for a primary circuit at a working voltage of 300Vrms, 425Vpeak, Overvoltage Category II.

Wire insulation & RoHS status not affected by wire color.
Wire insulation color may vary depending on availability.

REV.	DATE
6B	9/22
6A	9/17

Packaging Specifications
Method: Tray
PKG−0736
www.we−online.com/midcom
SEE REVISION SHEET FOR REVISION LEVEL

CONVENTION PLACEMENT

Tolerances unless otherwise specified:
Angles: ±1° Decimals: ±.005 [.13]
Fractions: ±1/64 Footprint: ±.001 [.03]
This drawing is dual dimensioned. Dimensions in brackets are in millimeters.

DRAWING TITLE
TRANSFORMER
eiSos p/n: 750343306

compliant RoHS

PART NO.
750343306
SPECIFICATION SHEET 1 OF 1

Unikeyic Electronics

Global Electronic Components Distributor

Click to view pricing, inventory, delivery, and lifecycle information:

WURTH:

560112110239 620307124022 636201040300 74438334022 784773147 830032817 860080275016 665102131822 687750225002 74408942330 7443633300 78438335033HT 810913006 744052002 810912012 865080457015 74437529203220 744393665015 782963560 830003237 971100477 560112110188 687640141002 140816144200 64900221122 64900821122 71206415 686124183822 714726110106 865230657014