TECH PUBLIC
台舟电子

TPESD3V3S2UAT

TVS Diode Array

WWW.TECHPUBLIC.COM

Features

- 230 Watts peak pulse power (tp = 8/20μs)
- Transient protection for high speed data lines to
  IEC 61000-4-2 (ESD) ±30kV (air), ±30kV (contact)
  IEC 61000-4-4 (EFT) 40A (5/50ns)
- Working voltages : 3.3V
- Protects one bidirectional line or two unidirectional lines
- Low operating and clamping voltages
- Solid-state silicon avalanche technology

Mechanical Characteristics

- Package: SOT23
- Lead Finish: Matte Tin
- UL Flammability Classification Rating 94V-0
- Pb-Free, Halogen Free, RoHS/WEEE Compliant

Applications

- USB Power & Data Line Protection
- Monitors and Flat Panel Displays
- I²C Bus Protection
- Portable Instrumentation
- Set Top Box

Ordering Information

Part Number	Qty per Reel	Reel Size
TPESD3V3S2UAT	3000	7″

Dimensions and Pin Configuration

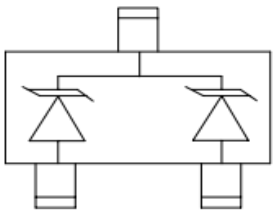

Absolute Maximum Ratings (T_A=25°C unless otherwise specified)

Parameter	Symbol	Value	Unit
Peak Pulse Power (8/20μs)	P_{pk}	230	W
ESD per IEC61000-4-2 (Air) ESD per IEC61000-4-2 (Contact)	V_{ESD}	±30 ±30	kV
Operating Temperature Range	T_J	-55 to +125	℃
Storage Temperature Range	T_{stg}	-55 to +150	℃

Electrical Characteristics (T_A=25°C unless otherwise specified)

Parameter	Symbol	Min	Typ	Max	Unit	Test Condition
Reverse Working Voltage	V_{RWM}			3.3	V	
Breakdown Voltage	V_{BR}	5.0	5.6	6	V	I_T=1mA
Leakage Current	I_{Leak}			1	uA	V_{RWM}=3.3V
Clamping Voltage	V_C			20	V	I_{PP} =10A,Tp=8/20 μs
Junction Capacitance	C_J			120	pF	V_R=0V, f=1MHz

PROTECTION PRODUCTS
Typical charateristics

Fig1. 8/20μs Pulse Waveform

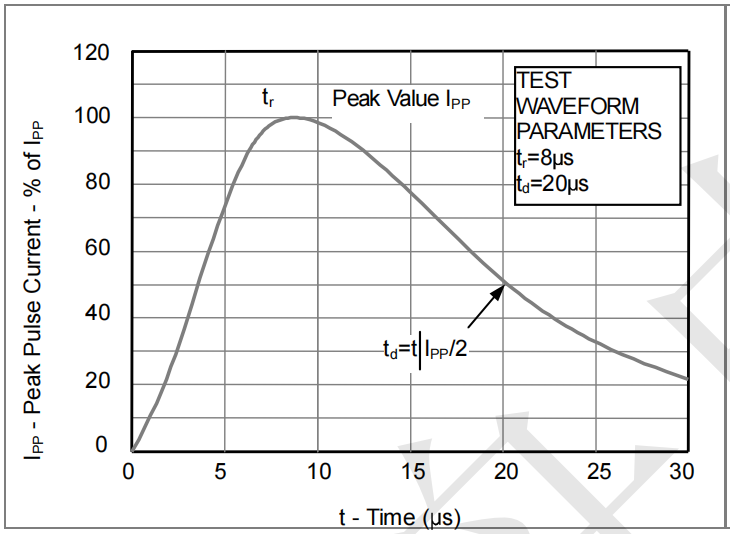

Fig2. ESD Pulse Waveform (according to IEC 61000-4-2)

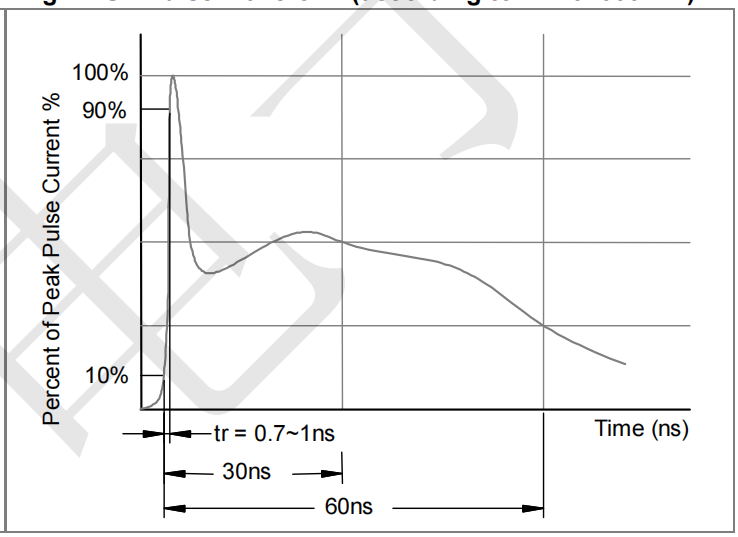

Fig3. Power Derating Curve

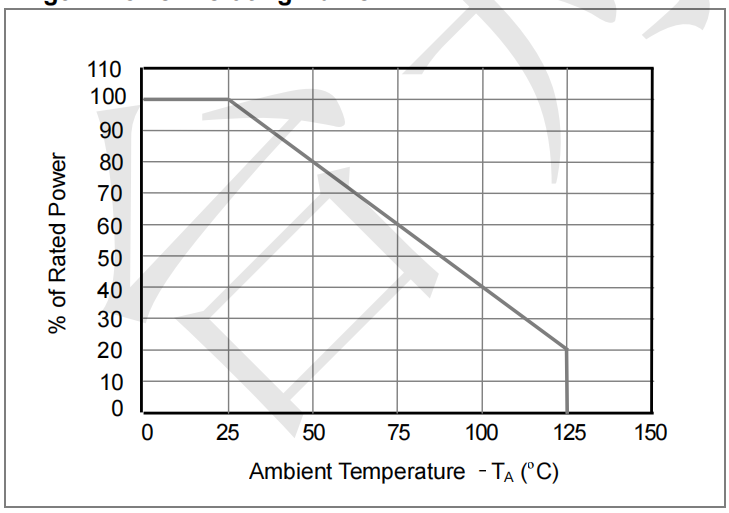

TPESD3V3S2UAT

TVS Diode Array

Outline Drawing - SOT23

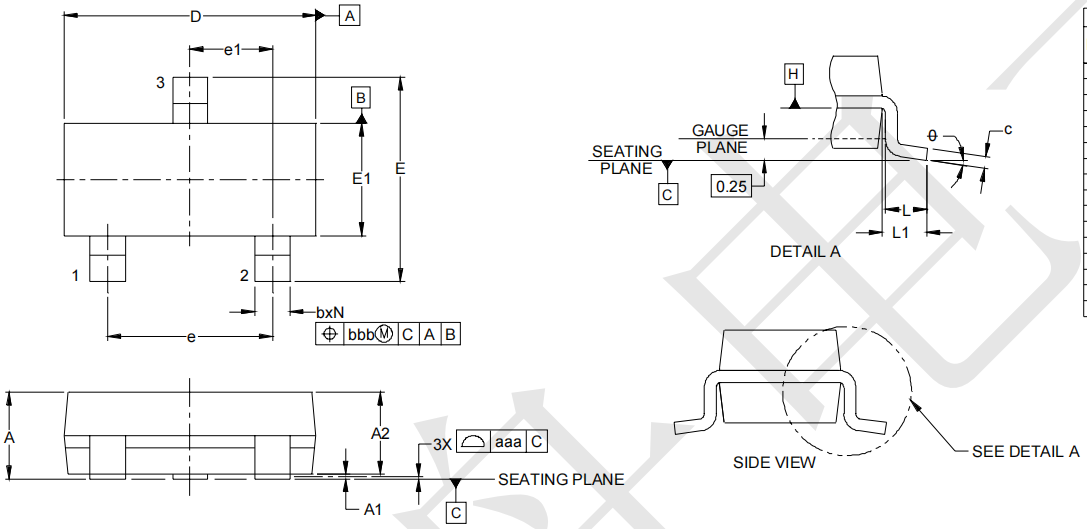

DIM	INCHES			MILLIMETERS		
	MIN	NOM	MAX	MIN	NOM	MAX
A	.035	-	.044	0.89	-	1.12
A1	.000	-	.004	0.01	-	0.10
A2	.035	.037	.040	0.88	0.95	1.02
b	.012	-	.020	0.30	-	0.51
c	.003	-	.007	0.08	-	0.18
D	.110	.114	.120	2.80	2.90	3.04
E	.082	.093	.104	2.10	2.37	2.64
E1	.047	.051	.055	1.20	1.30	1.40
e	.075			1.90 BSC		
e1	.037			0.95 BSC		
L	.015	.020	.024	0.40	0.50	0.60
L1	.022			(0.55)		
N	3			3		
θ	0°	-	8°	0°	-	8°
aaa	.004			0.10		
bbb	.008			0.20		

Land Pattern - SOT23

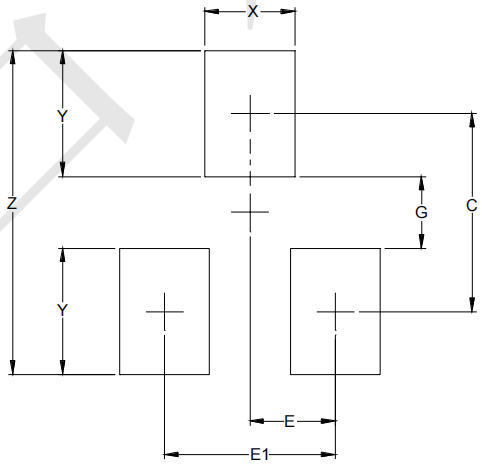

DIMENSIONS		
DIM	INCHES	MILLIMETERS
C	(.087)	(2.20)
E	.037	0.95
E1	.075	1.90
G	.031	0.80
X	.039	1.00
Y	.055	1.40
Z	.141	3.60

Unikeyic Electronics

Global Electronic Components Distributor

Click to view pricing, inventory, delivery, and lifecycle information:

TECH PUBLIC:

BZT52C6V2S PESD5V0F1BSF-TP SS56C TPMCP112T-290E/TT XC6219B332MR TPSTM1001SWX6F
DDTA143ZCA SIL2324A-TP SS510F TPESD0402G08V QM3003J-TP TPESD05R4UD FDN335N
SMAJ13CA TP3722S8 TPAX811MS4 TPD2E2U06DRLR-TP IRF5802TRPBF-TP TPESD0512S4-A
TPESD0504S6-A TPESDA17P100-1U2M 0402ESDA-18N-TP LM337BD2TR4G-TP TPAX809SS3
TPDMG6602SVT BZX84C16 PNTK3139PT5G XP202A0003PR-TP BV03CWT TPNTD20P06LT4G