SPECIFICATION CONTROL DRAWING

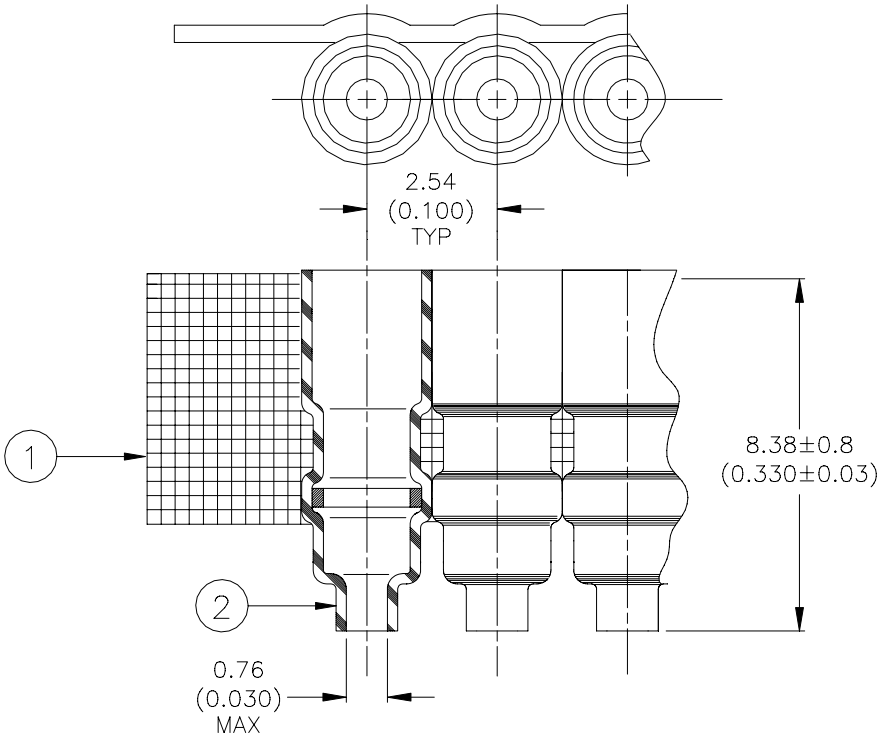

MATERIALS

1. SOLDERSLEEVE: D-141-21. Quantity Per Assembly: 1000
2. CARRIER STRIP: Adhesive Coated High Temperature Tape

APPLICATION

1. This assembly is designed for use on connectors having ø0.64 (ø0.25) terminals on 2.54 (0.100) center spacing.
2. Sleeves are to be installed using IR-1012 infrared heater, AD-1323 wire holding fixture, AD-1325 connector holding fixture, and AD-1324 Bandolier cutter.
3. For certain applications, the CV-4505 shop air heater may be used with an AD-1327 wire holding fixture.
4. The tape is to be removed after heating.
5. See page 2 for assembly procedure.

Raychem Interconnect a division of tyco | Electronics 300 Constitution Drive Menlo Park, CA 94025, USA		THERMOFIT DEVICES	TITLE : **SOLDERPAK ASSEMBLY, BURNDY UPC CONNECTOR** ø0.64x5.08 (ø0.025x0.200) Terminals on 2.54 (0.100) Center Spacing			
UNLESS OTHERWISE SPECIFIED DIMENSIONS ARE IN MILLIMETERS. INCHES DIMENSIONS ARE BETWEEN BRACKETS.			DOCUMENT NO.: **D-711-03**			
TOLERANCES: 0.00 N/A 0.0 N/A 0 N/A	ANGLES: N/A ROUGHNESS IN MICRON	Raychem reserves the right to amend this drawing at any time. Users should evaluate the suitability of the product for their application.	DCR NUMBER: D000589		REPLACES: N/A	
DRAWN BY: M. FORONDA	DATE: 02-Oct.-00	PROD. REV. C	DOC ISSUE: 1	SCALE: None	SIZE: A	SHEET: 1 of 2

If this document is printed it becomes uncontrolled. Check for the latest revision.

SPECIFICATION CONTROL DRAWING

THERMOFIT ASSEMBLY PROCEDURE

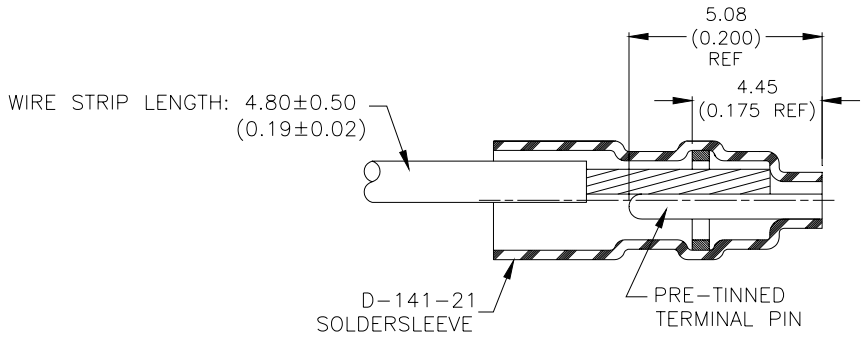

SolderSleeve and Lead in Position for Assembly

INSTALLATION PROCEDURE:

1. Terminals must be tinned prior to placement of sleeves.
2. Cut the correct number of sleeves from the reel.
3. Position sleeves onto connector terminals as shown above
4. Strip wire 4.83 (0.19).
5. Insert wires into sleeves. Wires should be straight and parallel to terminal.
6. Heating Technique:
    a. Infrared Heater IR-1012: Position connector into holding fixture. Place leads to be connected into correct sleeve. Position heater and energize, after setting timer for correct cycle. Remove tape.
    b. Convection Heater CV-4505: Position connector into AD-1327 holding fixture. Place leads to be connected into correct sleeve. Regulate airflow through nozzle to achieve an air temperature of 600° - 650°F at a point 7.62 (0.30) from the nozzle, (about 2.5 to 3 psig).
    Apply heat until solder flow is noted. Remove tape.

Raychem Interconnect a division of tyco | Electronics 300 Constitution Drive Menlo Park, CA 94025, USA		THERMOFIT DEVICES	TITLE : **SOLDERPAK ASSEMBLY, BURNDY UPC CONNECTOR** ø0.64x5.08 (ø0.025x0.200) Terminals on 2.54 (0.100) Center Spacing			
UNLESS OTHERWISE SPECIFIED DIMENSIONS ARE IN MILLIMETERS. INCHES DIMENSIONS ARE BETWEEN BRACKETS.			DOCUMENT NO.: **D-711-03**			
TOLERANCES: 0.00 N/A 0.0 N/A 0 N/A	ANGLES: N/A ROUGHNESS IN MICRON	Raychem reserves the right to amend this drawing at any time. Users should evaluate the suitability of the product for their application.	DCR NUMBER: D000589		REPLACES: N/A	
DRAWN BY: M. FORONDA	DATE: 02-Oct.-00	PROD. REV. C	DOC ISSUE: 1	SCALE: None	SIZE: A	SHEET: 2 of 2

If this document is printed it becomes uncontrolled. Check for the latest revision.

Unikeyic Electronics

Global Electronic Components Distributor

Click to view pricing, inventory, delivery, and lifecycle information:

TE Connectivity:

CRGCQ2010J3K3 U5254-000005-030PA 2310537-1 3-1393225-0 917696-1 CPF0402B37K4E1 ROX05SJ18R 175977-2 2005330-1 SBCHE154R7K SMW73R0JT RH73H2A40MKTN 141991-2 1743455-2 3430B2F51RTDF 650075-000 MPT100C18RF 2-292161-3 1393431-1 2377783-2 2380312-2 TE50BR39J 1-962915-1 1969656-1 2834055-1 936348-1 SBCHE64R7K 1-794222-0 1903112-2 3631B101LL