PART NUMBER	ITEM ① BODY	ITEM ② CONTACT	ITEM ③ INSULATOR
146-0701-201	BRASS GOLD PL .00001 MIN OVER NICKEL PL .00005 MIN OVER COPPER PL .00005 MIN	BERYLLIUM COPPER GOLD PL .00005 MIN OVER NICKEL PL .00005 MIN OVER COPPER PL .00005 MIN	TEFLON

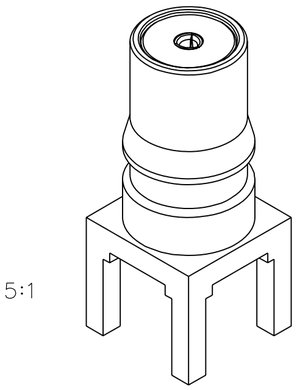

5:1

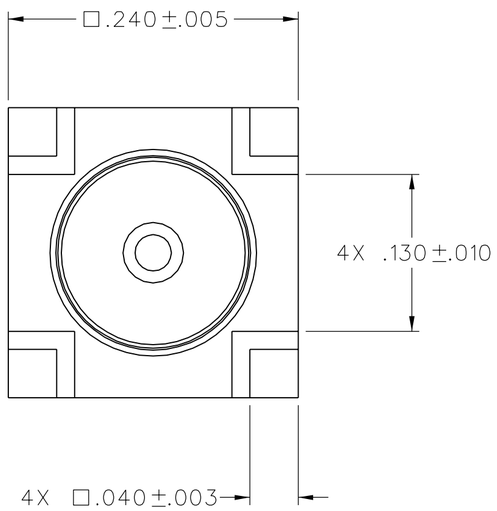

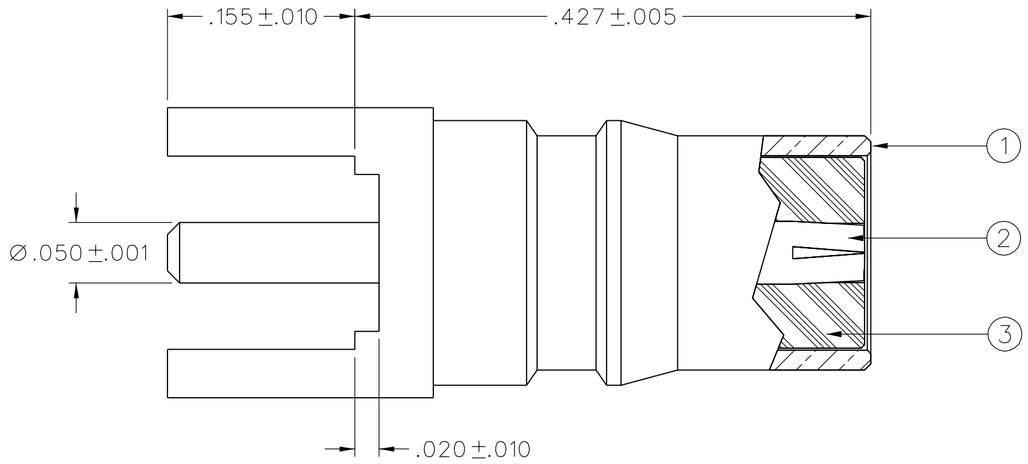

NOTES:

1. SPECIFICATIONS:

IMPEDANCE: 50 OHMS
FREQUENCY RANGE: 0-12.4 GHz
VSWR: NOT APPLICABLE
WORKING VOLTAGE: 335 VRMS MAX AT SEA LEVEL
DIELECTRIC WITHSTANDING VOLTAGE: 1000 VRMS MIN AT SEA LEVEL
INSULATION RESISTANCE: 5000 MEGOHM MIN
CONTACT RESISTANCE:
CENTER CONTACT - INITIAL 3.0 MILLIOHM MAX, AFTER ENVIRONMENTAL 4.0 MILLIOHM MAX
OUTER CONDUCTOR - INITIAL 2.0 MILLIOHM MAX AFTER ENVIRONMENTAL NOT APPLICABLE
BRAID TO BODY - NOT APPLICABLE
CORONA LEVEL: 250 VOLTS MIN AT 70,000 FEET
INSERTION LOSS: NOT APPLICABLE
RF LEAKAGE: NOT APPLICABLE
RF HIGH POTENTIAL WITHSTANDING VOLTAGE: 670 VRMS MIN AT 4 AND 7 MHz

MECHANICAL:

ENGAGE FORCE: 5.6 POUNDS (TYPICAL)
DISENGAGE FORCE: 4.5 POUNDS (TYPICAL)
COUPLING SPRING RETENTION: NOT APPLICABLE
CONTACT RETENTION: 6 LBS MIN AXIAL FORCE
4 IN-OZ MIN RADIAL TORQUE
CABLE ACCEPTABILITY: NOT APPLICABLE
CABLE HEX CRIMP SIZE: NOT APPLICABLE
CABLE RETENTION: NOT APPLICABLE
DURABILITY: 500 CYCLES MIN

ENVIRONMENTAL:

(MEETS OR EXCEEDS THE APPLICABLE PARAGRAPH OF MIL-PRF-39012)
THERMAL SHOCK: MIL-STD-202, METHOD 107, CONDITION B
OPERATING TEMPERATURE: -65 DEG C TO 165 DEG C
CORROSION: MIL-STD-202, METHOD 101, CONDITION B
SHOCK: MIL-STD-202, METHOD 213, CONDITION I
VIBRATION: MIL-STD-202, METHOD 204, CONDITION D
MOISTURE RESISTANCE: MIL-STD-202, METHOD 106

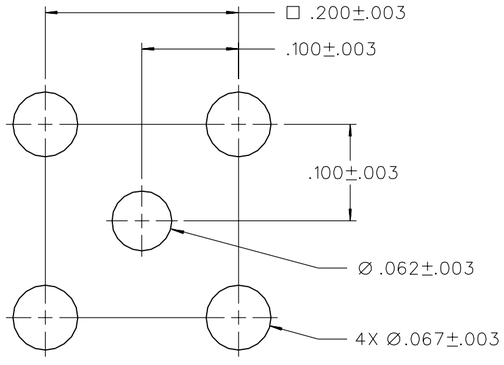

MOUNTING HOLE LAYOUT

8:1

DRAWING NO.
C – 142-0701-201/210

0	REVISIONS						
ENGINEERING RELEASE							
1	2-18-09	PAT	TAK	RB	MJU		3-17-09 ECN 51844

CUSTOMER DRAWING

THIS DRAWING TO BE INTERPRETED PER ASME Y 14.5M - 1994

"μSTATION"

COMPANY CONFIDENTIAL

TOLERANCE UNLESS OTHERWISE SPECIFIED		DRAWN BY	DATE
DECIMALS	mm	T.A.Kari	8-5-08
.XX		CHECKED BY	DATE
.XXX			
MATL		APPROVED BY RB	DATE 3-27-09
FINISH		RELEASE DATE	3-27-09
		U/M INCH	SCALE 10:1

cinch CONNECTIVITY SOLUTIONS a bel group

Cinch Connectivity Solutions
P.O. Box 1732
Waseca, MN 56093
1-800-247-8256

TITLE
JACK ASSEMBLY, STRAIGHT PC MOUNT KWIQMATE

SHEET	DRAWING NO.
2 OF 2	C – 146-0701-201/210

Unikeyic Electronics

Global Electronic Components Distributor

Click to view pricing, inventory, delivery, and lifecycle information:

Cinch:

12-141 142-0403-011 147-0701-241 40-9715HM 415-0030-MM150 415-0043-MM250
CN1021A14G03P8-040 135-3402-001 415-0203-024 ATT-0263-04-SMA-02 108-0913-001 145-0693-002
21-14-M5.0 40-98443N-C 415-0536-012 DEUH-9P 30-9506-88 30-9516 CJ70-7 M24308/4-5F
111-0102-001 145-0701-821 415-0028-048 8-141 131-3701-306 147-0701-832 CN0967C10A20P6-040
C0909A18-11PN-106 DD2466134 M49142/03-0005