

SOP-18

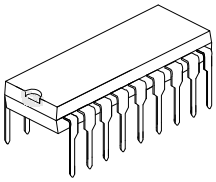

DIP-18

■ DESCRIPTION

The **ULN2803** is high-voltage, high-current Darlington drivers comprised of eight NPN Darlington pairs.

■ FEATURES

*Output current (single output) 500mA MAX.
*High sustaining voltage output 50V MIN.
*Output clamp diodes
*Inputs compatible with various types of logic

■ SCHEMATICS (EACH DRIVER)

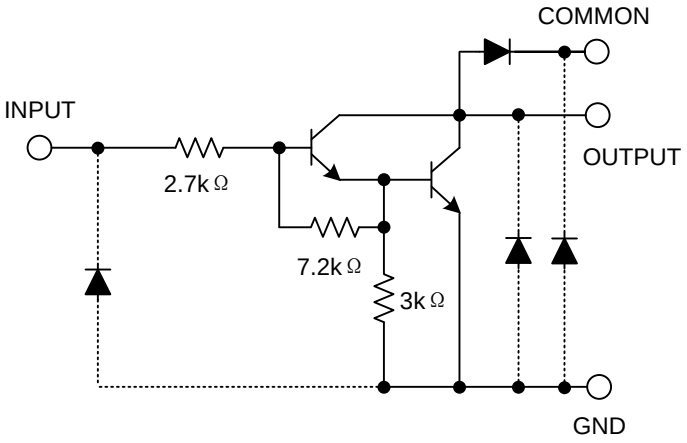

Note: The input and output parasitic diodes cannot be used as clamp diodes.

■ PIN CONFIGURATIONS

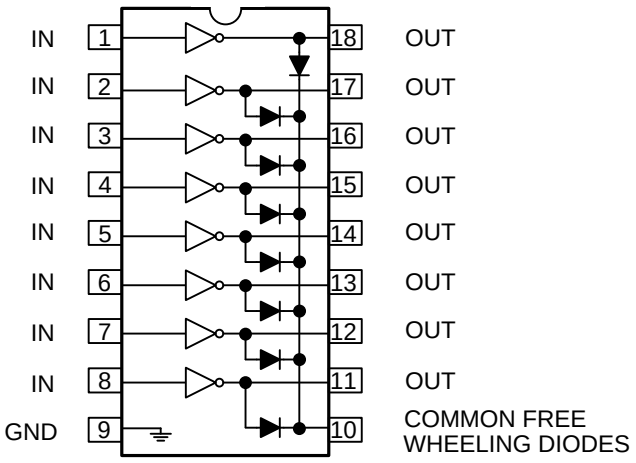

■ ABSOLUTE MAXIMUM RATINGS

PARAMETER		SYMBOL	RATINGS	UNIT
Input Voltage		V_{IN}	-0.5~30	V
Output Sustaining Voltage		$V_{CE\ (SUS)}$	-0.5~50	V
Output Current		I_{OUT}	500	mA/ch
Clamp Diode Reverse Voltage		VR	50	V
Clamp Diode Forward Current		I_F	500	mA
Power Dissipation	DIP-18	P_D	1.47	W
	SOP-18		0.54/0.625(Note)	
Operating Temperature		T_{OPR}	-40 ~ +85	°C
Storage Temperature		T_{STG}	-40 ~ +150	°C

Note 1. On glass epoxy PCB (30x30x1.6mm Cu 50%)

2. Absolute maximum ratings are stress ratings only and functional device operation is not implied. The device could be damaged beyond Absolute maximum ratings.

■ ELECTRICAL CHARACTERISTICS (Ta=25°C, unless otherwise specified.)

PARAMETER		SYMBOL	TEST CIRCUIT	TEST CONDITIONS	MIN	TYP	MAX	UNIT
Output Leakage Current		I_{CEX}	1	V_{CE}=50V,T_a=25°C V_{CE}=50V,T_a=85°C			50 100	μA
Collector-Emitter Saturation Voltage		$V_{CE(SAT)}$	2	I_{OUT}=350mA,I_{IN}=500μA I_{OUT}=200mA,I_{IN}=350μA I_{OUT}=100mA,I_{IN}=250μA		1.3 1.1 0.9	1.6 1.3 1.1	V
Input Current	ON	$I_{IN(ON)}$	3	V_{IN} =3.85V,I_{OUT}=350mA		0.93	1.35	mA
	OFF	$I_{IN(OFF)}$	4	I_{OUT}=500μA, T_a=85°C	50	65		μA
Input Voltage (output on)		$V_{IN(ON)}$	5	V_{CE}=2.0V I_{OUT}=200mA I_{OUT}=250mA I_{OUT}=300mA			2.4 2.7 3.0	V
Clamp Diode Reverse Current		I_R	6	V_R=50V, T_a=25°C V_R=50V, T_a=85°C			50 100	μA
Clamp Diode Forward Voltage		V_F	7	I_F=350mA			2.0	V
Input Capacitance		C_{IN}				15	25	pF
Turn-On Delay		t_{ON}	8	V_{OUT}=50V,R_L=125Ω,C_L=15pF		0.1	1	μS
Turn-Off Delay		t_{OFF}	8	V_{OUT}=50V,R_L=125Ω,C_L=15pF		0.2	1	μS

■ TEST CIRCUIT

1. I_{CEX}

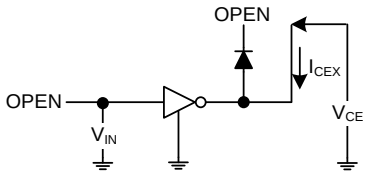

2. $V_{CE\ (sat)}$, h_{FE}

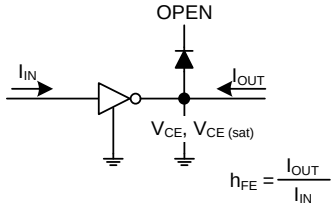

3. $I_{IN\ (ON)}$

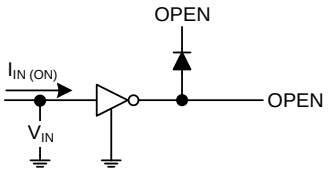

4. $I_{IN\ (OFF)}$

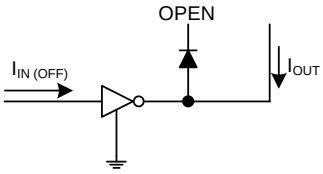

5. $V_{IN\ (ON)}$

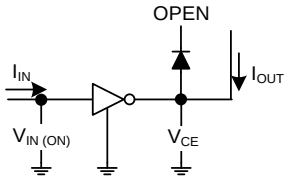

6. I_R

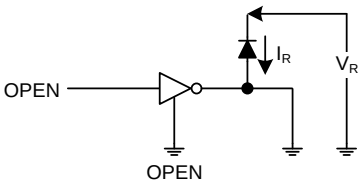

7. V_F

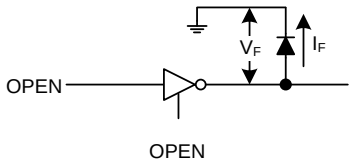

8. t_{ON}, t_{OFF}

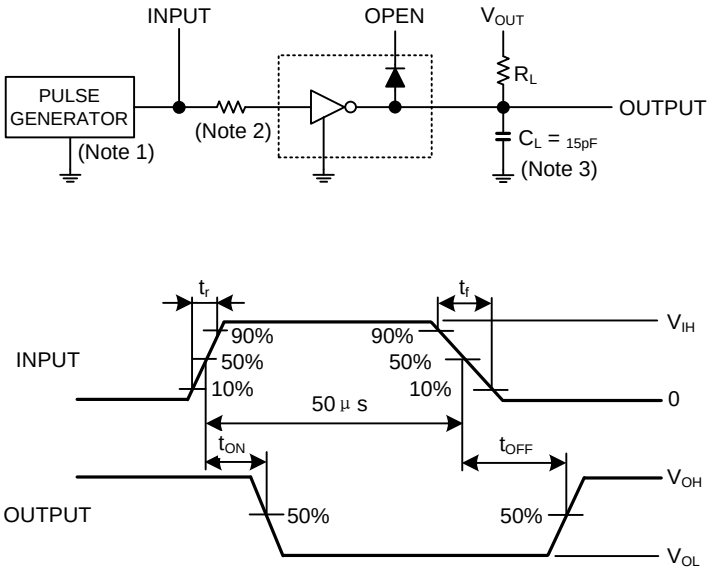

Note1: Pulse width 50μs, duty cycle 10%
Output impedance 50Ω, tr<=5ns, tf<=10ns
Note2: R1: 0, V_{IH}: 3V
Note3: CL includes probe and jig capacitance.

■ TYPICAL CHARACTERISTICS

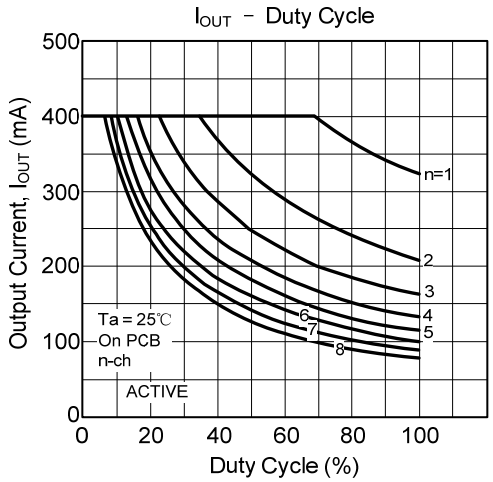

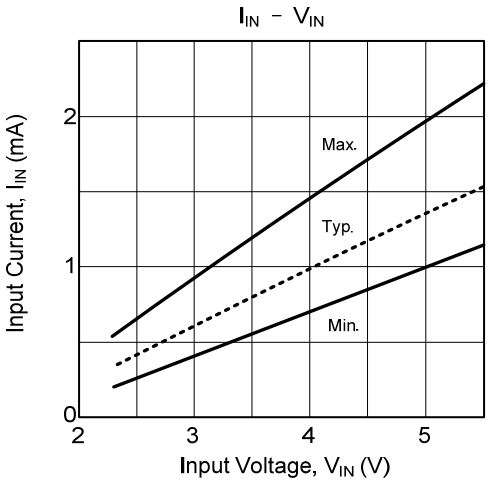

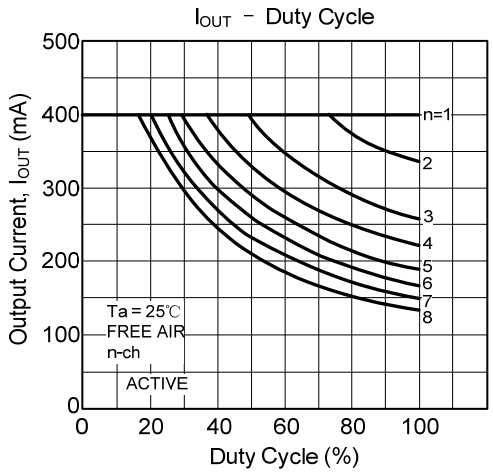

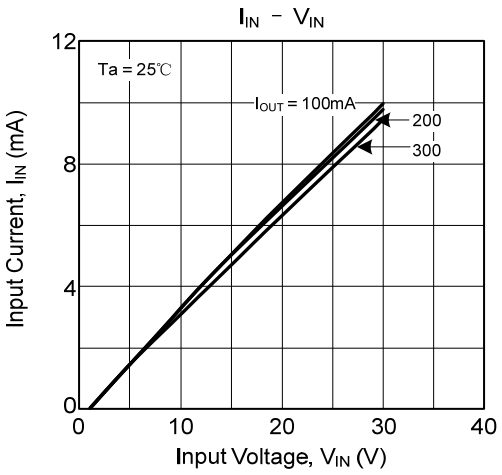

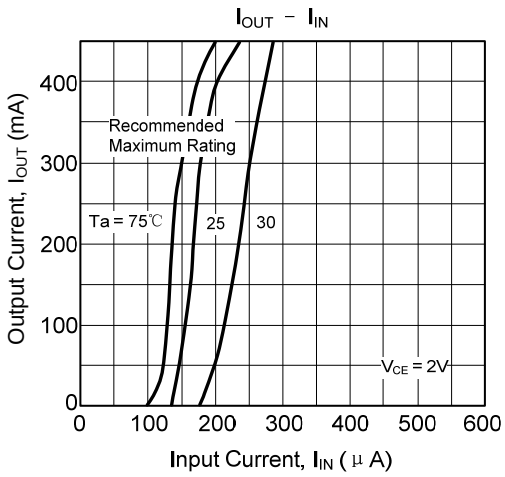

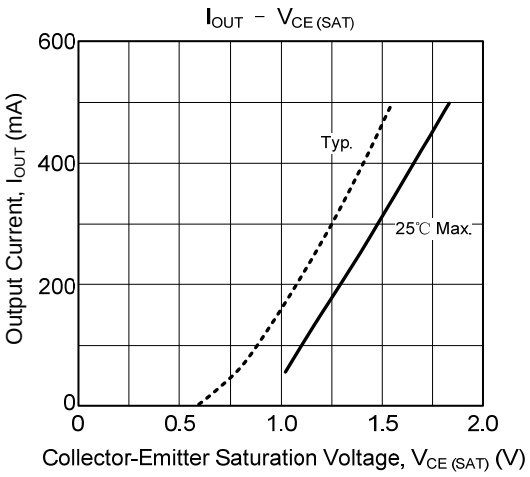

■ TYPICAL CHARACTERISTICS(Cont.)

