- ***EPIC*™ (Enhanced-Performance Implanted CMOS) 2-μ Process**
- **Typical V_{OLP} (Output Ground Bounce) < 0.8 V at V_{CC}, T_A = 25°C**
- **Typical V_{OHV} (Output V_{OH} Undershoot) > 2 V at V_{CC}, T_A = 25°C**
- **ESD Protection Exceeds 2000 V Per MIL-STD-883C, Method 3015; Exceeds 200 V Using Machine Model (C = 200 pF, R = 0)**
- **Latch-Up Performance Exceeds 250 mA Per JEDEC Standard JESD-17**
- **Package Options Include Plastic Small-Outline (D), Shrink Small-Outline (DB), Thin Shrink Small-Outline (PW), Ceramic Flat (W) Packages, Chip Carriers (FK), and (J) 300-mil DIPs**

SN54LV138 . . . J OR W PACKAGE
SN74LV138 . . . D, DB, OR PW PACKAGE
(TOP VIEW)

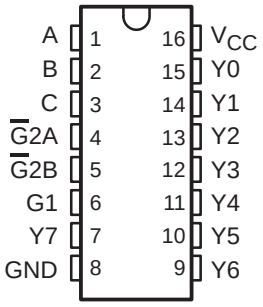

SN54LV138 . . . FK PACKAGE
(TOP VIEW)

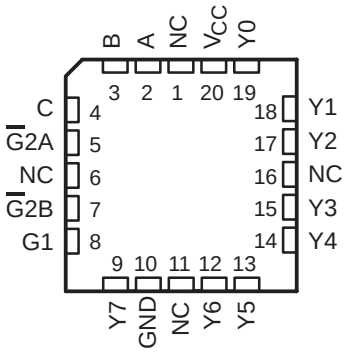

NC – No internal connection

description

These 3-line to 8-line decoders/demultiplexers are designed for 2.7-V to 5.5-V V_{CC} operation.

The ’LV138 are designed for high-performance memory-decoding or data-routing applications requiring very short propagation delay times. In high-performance memory systems, this decoder can be used to minimize the effects of system decoding. When employed with high-speed utilizing a fast enable circuit, the delay times of this decoder and the enable time of the memory are usually less than the typical access time of the memory. This means that the effective system delay introduced by the decoder is negligible.

The conditions at the binary-select inputs and the three enable inputs select one of eight output lines. Two active-low and one active-high enable inputs reduce the need for external gates or inverters when expanding. A 24-line decoder can be implemented without external inverters and a 32-line decoder requires only one inverter. An enable input can be used as a data input for demultiplexing applications.

The SN74LV138 is available in TI’s shrink small-outline package (DB), which provides the same I/O pin count and functionality of standard small-outline packages in less than half the printed-circuit-board area.

The SN54LV138 is characterized for operation over the full military temperature range of –55°C to 125°C. The SN74LV138 is characterized for operation from –40°C to 85°C.

Please be aware that an important notice concerning availability, standard warranty, and use in critical applications of Texas Instruments semiconductor products and disclaimers thereto appears at the end of this data sheet.

EPIC is a trademark of Texas Instruments Incorporated.

UNLESS OTHERWISE NOTED this document contains PRODUCTION DATA information current as of publication date. Products conform to specifications per the terms of Texas Instruments standard warranty. Production processing does not necessarily include testing of all parameters.

Copyright © 1996, Texas Instruments Incorporated

FUNCTION TABLE

ENABLE INPUTS			SELECT INPUTS			OUTPUTS							
G1	$\overline{G}$2A	$\overline{G}$2B	C	B	A	Y0	Y1	Y2	Y3	Y4	Y5	Y6	Y7
X	H	X	X	X	X	H	H	H	H	H	H	H	H
X	X	H	X	X	X	H	H	H	H	H	H	H	H
L	X	X	X	X	X	H	H	H	H	H	H	H	H
H	L	L	L	L	L	L	H	H	H	H	H	H	H
H	L	L	L	L	H	H	L	H	H	H	H	H	H
H	L	L	L	H	L	H	H	L	H	H	H	H	H
H	L	L	L	H	H	H	H	H	L	H	H	H	H
H	L	L	H	L	L	H	H	H	H	L	H	H	H
H	L	L	H	L	H	H	H	H	H	H	L	H	H
H	L	L	H	H	L	H	H	H	H	H	H	L	H
H	L	L	H	H	H	H	H	H	H	H	H	H	L

logic symbols (alternatives)†

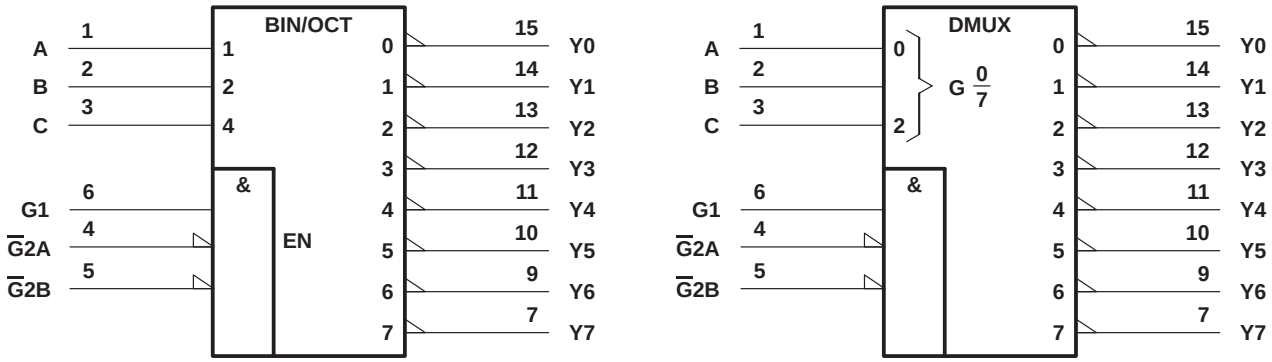

† These symbols are in accordance with ANSI/IEEE Std 91-1984 and IEC Publication 617-12.
Pin numbers shown are for D, DB, J, PW, and W packages.

logic diagram (positive logic)

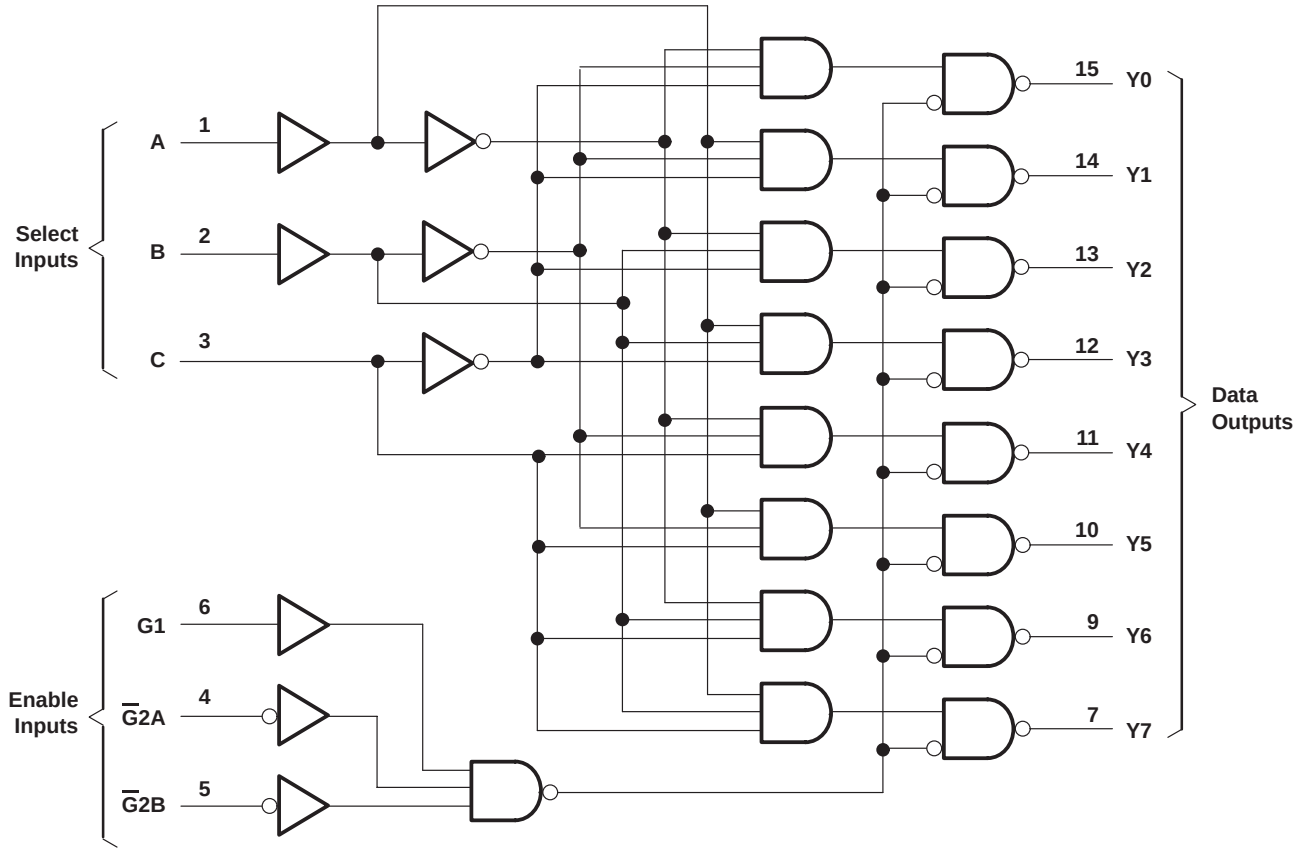

absolute maximum ratings over operating free-air temperature range (unless otherwise noted)†

Supply voltage range, V_{CC} . . . . . –0.5 V to 7 V
Input voltage range, V_I (see Note 1) . . . . . –0.5 V to V_{CC} + 0.5 V
Output voltage range, V_O (see Notes 1 and 2) . . . . . –0.5 V to V_{CC} + 0.5 V
Input clamp current, I_{IK} (V_I < 0 or V_I > V_{CC}) . . . . . ±20 mA
Output clamp current, I_{OK} (V_O < 0 or V_O > V_{CC}) . . . . . ±50 mA
Continuous output current, I_O (V_O = 0 to V_{CC}) . . . . . ±25 mA
Continuous current through V_{CC} or GND . . . . . ±50 mA
Maximum power dissipation at T_A = 55°C (in still air) (see Note 3): D package . . . . . 1.3 W
DB package . . . . . 0.55 W
PW package . . . . . 0.5 W
Storage temperature range, T_{stg} . . . . . –65°C to 150°C

† Stresses beyond those listed under “absolute maximum ratings” may cause permanent damage to the device. These are stress ratings only, and functional operation of the device at these or any other conditions beyond those indicated under “recommended operating conditions” is not implied. Exposure to absolute-maximum-rated conditions for extended periods may affect device reliability.

NOTES: 1. The input and output voltage ratings may be exceeded if the input and output current ratings are observed.
2. This value is limited to 7 V maximum.
3. The maximum package power dissipation is calculated using a junction temperature of 150°C and a board trace length of 750 mils.

recommended operating conditions (see Note 4)

			SN54LV138		SN74LV138		UNIT
			MIN	MAX	MIN	MAX	
V_{CC}	Supply voltage		2.7	5.5	2.7	5.5	V
V_{IH}	High-level input voltage	V_{CC} = 2.7 V to 3.6 V	2		2		V
		V_{CC} = 4.5 V to 5.5 V	3.15		3.15		
V_{IL}	Low-level input voltage	V_{CC} = 2.7 V to 3.6 V		0.8		0.8	V
		V_{CC} = 4.5 V to 5.5 V		1.65		1.65	
V_I	Input voltage		0	V_{CC}	0	V_{CC}	V
V_O	Output voltage		0	V_{CC}	0	V_{CC}	V
I_{OH}	High-level output current	V_{CC} = 2.7 V to 3.6 V		–6		–6	mA
		V_{CC} = 4.5 V to 5.5 V		–12		–12	
I_{OL}	Low-level output current	V_{CC} = 2.7 V to 3.6 V		6		6	mA
		V_{CC} = 4.5 V to 5.5 V		12		12	
$\Delta t/\Delta v$	Input transition rise or fall rate		0	100	0	100	ns/V
T_A	Operating free-air temperature		–55	125	–40	85	°C

NOTE 4: Unused inputs must be held high or low to prevent them from floating.

PRODUCT PREVIEW

PRODUCT PREVIEW information concerns products in the formative or design phase of development. Characteristic data and other specifications are design goals. Texas Instruments reserves the right to change or discontinue these products without notice.

electrical characteristics over recommended operating free-air temperature range (unless otherwise noted)

PARAMETER	TEST CONDITIONS		V_{CC}†	SN54LV138			SN74LV138			UNIT
				MIN	TYP	MAX	MIN	TYP	MAX	
V_{OH}	I_{OH} = –100 μA		MIN to MAX	V_{CC}–0.2			V_{CC}–0.2			V
	I_{OH} = –6 mA		3 V	2.4			2.4			
	I_{OH} = –12 mA		4.5 V	3.6			3.6			
V_{OL}	I_{OL} = 100 μA		MIN to MAX			0.2			0.2	V
	I_{OL} = 6 mA		3 V			0.4			0.4	
	I_{OL} = 12 mA		4.5 V			0.55			0.55	
I_I	$V_I = V_{CC}$ or GND		3.6 V			±1			±1	μA
			5.5 V			±1			±1	
I_{CC}	$V_I = V_{CC}$ or GND	I_O = 0	3.6 V			20			20	μA
			5.5 V			20			20	
ΔI_{CC}	One input at V_{CC} – 0.6 V	Other inputs at V_{CC} or GND	3 V to 3.6 V			500			500	μA
C_i	$V_I = V_{CC}$ or GND		3.3 V		2.5			2.5		pF
			5 V		2.1			2.1		

† For conditions shown as MIN or MAX, use the appropriate values under recommended operating conditions.

PRODUCT PREVIEW

switching characteristics over recommended operating free-air temperature range, C_L = 50 pF (unless otherwise noted) (see Figure 1)

PARAMETER	FROM (INPUT)	TO (OUTPUT)	SN54LV138								UNIT
			V_{CC} = 5 V ± 0.5 V			V_{CC} = 3.3 V ± 0.3 V			V_{CC} = 2.7 V		
			MIN	TYP	MAX	MIN	TYP	MAX	MIN	MAX	
t_{pd}	A, B, or C	Y		8	16		10	21		26	ns
	Enable			8	19		10	23		29	

PRODUCT PREVIEW

switching characteristics over recommended operating free-air temperature range, C_L = 50 pF (unless otherwise noted) (see Figure 1)

PARAMETER	FROM (INPUT)	TO (OUTPUT)	SN74LV138								UNIT
			V_{CC} = 5 V ± 0.5 V			V_{CC} = 3.3 V ± 0.3 V			V_{CC} = 2.7 V		
			MIN	TYP	MAX	MIN	TYP	MAX	MIN	MAX	
t_{pd}	A, B, or C	Y		8	16		10	21		26	ns
	Enable			8	19		10	23		29	

operating characteristics, T_A = 25°C

PARAMETER		TEST CONDITIONS	V_{CC}	TYP	UNIT
C_{pd}	Power dissipation capacitance per channel	C_L = 50 pF, f = 10 MHz	3.3 V	47	pF
			5 V	49	

PRODUCT PREVIEW information concerns products in the formative or design phase of development. Characteristic data and other specifications are design goals. Texas Instruments reserves the right to change or discontinue these products without notice.

PARAMETER MEASUREMENT INFORMATION

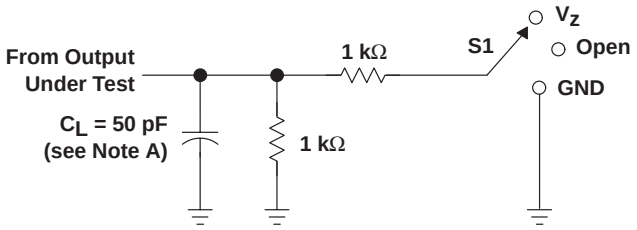

LOAD CIRCUIT

TEST	S1
t_{PLH}/t_{PHL}	Open
t_{PLZ}/t_{PZL}	V_z
t_{PHZ}/t_{PZH}	GND

WAVEFORM CONDITION	V_{CC} = 4.5 V to 5.5 V	V_{CC} = 2.7 V to 3.6 V
V_m	$0.5 \times V_{CC}$	1.5 V
V_i	V_{CC}	2.7 V
V_z	$2 \times V_{CC}$	6 V

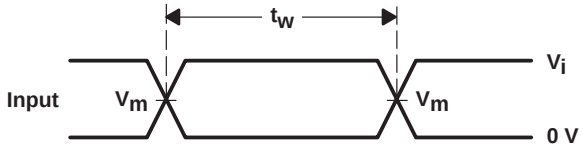

VOLTAGE WAVEFORMS
PULSE DURATION

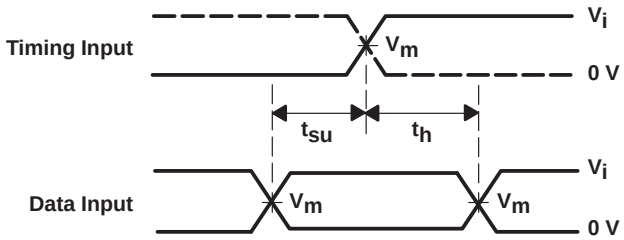

VOLTAGE WAVEFORMS
SETUP AND HOLD TIMES

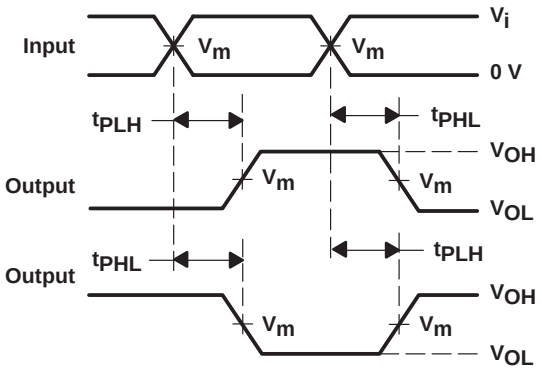

VOLTAGE WAVEFORMS
PROPAGATION DELAY TIMES
INVERTING AND NONINVERTING OUTPUTS

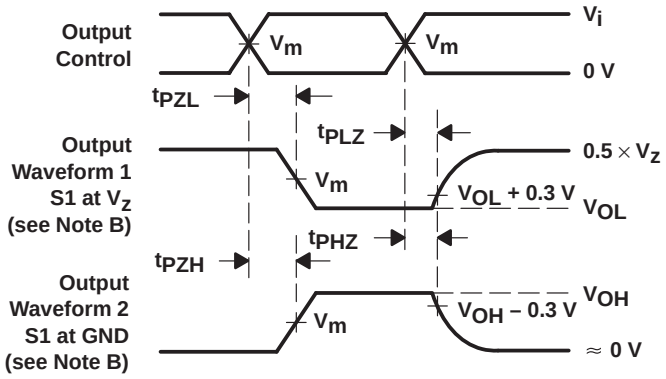

VOLTAGE WAVEFORMS
ENABLE AND DISABLE TIMES
LOW- AND HIGH-LEVEL ENABLING

NOTES: A. C_L includes probe and jig capacitance.
B. Waveform 1 is for an output with internal conditions such that the output is low except when disabled by the output control. Waveform 2 is for an output with internal conditions such that the output is high except when disabled by the output control.
C. All input pulses are supplied by generators having the following characteristics: PRR ≤ 10 MHz, Z_O = 50 Ω, t_r ≤ 2.5 ns, t_f ≤ 2.5 ns.
D. The outputs are measured one at a time with one transition per measurement.
E. t_{PLZ} and t_{PHZ} are the same as t_{dis}.
F. t_{PZL} and t_{PZH} are the same as t_{en}.
G. t_{PLH} and t_{PHL} are the same as t_{pd}.

Figure 1. Load Circuit and Voltage Waveforms

PACKAGING INFORMATION

Orderable Device	Status [1]	Package Type	Package Drawing	Pins	Package Qty	Eco Plan [2]	Lead/Ball Finish	MSL Peak Temp [3]
SN74LV138D	OBSOLETE	SOIC	D	16		TBD	Call TI	Call TI
SN74LV138DBLE	OBSOLETE	SSOP	DB	16		TBD	Call TI	Call TI
SN74LV138DR	OBSOLETE	SOIC	D	16		TBD	Call TI	Call TI
SN74LV138PWLE	OBSOLETE	TSSOP	PW	16		TBD	Call TI	Call TI

[1] The marketing status values are defined as follows:
ACTIVE: Product device recommended for new designs.
LIFEBUY: TI has announced that the device will be discontinued, and a lifetime-buy period is in effect.
NRND: Not recommended for new designs. Device is in production to support existing customers, but TI does not recommend using this part in a new design.
PREVIEW: Device has been announced but is not in production. Samples may or may not be available.
OBSOLETE: TI has discontinued the production of the device.

[2] Eco Plan - The planned eco-friendly classification: Pb-Free (RoHS), Pb-Free (RoHS Exempt), or Green (RoHS & no Sb/Br) - please check http://www.ti.com/productcontent for the latest availability information and additional product content details.
TBD: The Pb-Free/Green conversion plan has not been defined.
Pb-Free (RoHS): TI's terms "Lead-Free" or "Pb-Free" mean semiconductor products that are compatible with the current RoHS requirements for all 6 substances, including the requirement that lead not exceed 0.1% by weight in homogeneous materials. Where designed to be soldered at high temperatures, TI Pb-Free products are suitable for use in specified lead-free processes.
Pb-Free (RoHS Exempt): This component has a RoHS exemption for either 1) lead-based flip-chip solder bumps used between the die and package, or 2) lead-based die adhesive used between the die and leadframe. The component is otherwise considered Pb-Free (RoHS compatible) as defined above.
Green (RoHS & no Sb/Br): TI defines "Green" to mean Pb-Free (RoHS compatible), and free of Bromine (Br) and Antimony (Sb) based flame retardants (Br or Sb do not exceed 0.1% by weight in homogeneous material)

[3] MSL, Peak Temp. -- The Moisture Sensitivity Level rating according to the JEDEC industry standard classifications, and peak solder temperature.

Important Information and Disclaimer: The information provided on this page represents TI's knowledge and belief as of the date that it is provided. TI bases its knowledge and belief on information provided by third parties, and makes no representation or warranty as to the accuracy of such information. Efforts are underway to better integrate information from third parties. TI has taken and continues to take reasonable steps to provide representative and accurate information but may not have conducted destructive testing or chemical analysis on incoming materials and chemicals. TI and TI suppliers consider certain information to be proprietary, and thus CAS numbers and other limited information may not be available for release.

In no event shall TI's liability arising out of such information exceed the total purchase price of the TI part(s) at issue in this document sold by TI to Customer on an annual basis.

IMPORTANT NOTICE

Texas Instruments Incorporated and its subsidiaries (TI) reserve the right to make corrections, modifications, enhancements, improvements, and other changes to its products and services at any time and to discontinue any product or service without notice. Customers should obtain the latest relevant information before placing orders and should verify that such information is current and complete. All products are sold subject to TI's terms and conditions of sale supplied at the time of order acknowledgment.

TI warrants performance of its hardware products to the specifications applicable at the time of sale in accordance with TI's standard warranty. Testing and other quality control techniques are used to the extent TI deems necessary to support this warranty. Except where mandated by government requirements, testing of all parameters of each product is not necessarily performed.

TI assumes no liability for applications assistance or customer product design. Customers are responsible for their products and applications using TI components. To minimize the risks associated with customer products and applications, customers should provide adequate design and operating safeguards.

TI does not warrant or represent that any license, either express or implied, is granted under any TI patent right, copyright, mask work right, or other TI intellectual property right relating to any combination, machine, or process in which TI products or services are used. Information published by TI regarding third-party products or services does not constitute a license from TI to use such products or services or a warranty or endorsement thereof. Use of such information may require a license from a third party under the patents or other intellectual property of the third party, or a license from TI under the patents or other intellectual property of TI.

Reproduction of TI information in TI data books or data sheets is permissible only if reproduction is without alteration and is accompanied by all associated warranties, conditions, limitations, and notices. Reproduction of this information with alteration is an unfair and deceptive business practice. TI is not responsible or liable for such altered documentation. Information of third parties may be subject to additional restrictions.

Resale of TI products or services with statements different from or beyond the parameters stated by TI for that product or service voids all express and any implied warranties for the associated TI product or service and is an unfair and deceptive business practice. TI is not responsible or liable for any such statements.

TI products are not authorized for use in safety-critical applications (such as life support) where a failure of the TI product would reasonably be expected to cause severe personal injury or death, unless officers of the parties have executed an agreement specifically governing such use. Buyers represent that they have all necessary expertise in the safety and regulatory ramifications of their applications, and acknowledge and agree that they are solely responsible for all legal, regulatory and safety-related requirements concerning their products and any use of TI products in such safety-critical applications, notwithstanding any applications-related information or support that may be provided by TI. Further, Buyers must fully indemnify TI and its representatives against any damages arising out of the use of TI products in such safety-critical applications.

TI products are neither designed nor intended for use in military/aerospace applications or environments unless the TI products are specifically designated by TI as military-grade or "enhanced plastic." Only products designated by TI as military-grade meet military specifications. Buyers acknowledge and agree that any such use of TI products which TI has not designated as military-grade is solely at the Buyer's risk, and that they are solely responsible for compliance with all legal and regulatory requirements in connection with such use.

TI products are neither designed nor intended for use in automotive applications or environments unless the specific TI products are designated by TI as compliant with ISO/TS 16949 requirements. Buyers acknowledge and agree that, if they use any non-designated products in automotive applications, TI will not be responsible for any failure to meet such requirements.

Following are URLs where you can obtain information on other Texas Instruments products and application solutions:

Products		**Applications**	
Amplifiers	amplifier.ti.com	Audio	www.ti.com/audio
Data Converters	dataconverter.ti.com	Automotive	www.ti.com/automotive
DSP	dsp.ti.com	Broadband	www.ti.com/broadband
Clocks and Timers	www.ti.com/clocks	Digital Control	www.ti.com/digitalcontrol
Interface	interface.ti.com	Medical	www.ti.com/medical
Logic	logic.ti.com	Military	www.ti.com/military
Power Mgmt	power.ti.com	Optical Networking	www.ti.com/opticalnetwork
Microcontrollers	microcontroller.ti.com	Security	www.ti.com/security
RFID	www.ti-rfid.com	Telephony	www.ti.com/telephony
RF/IF and ZigBee® Solutions	www.ti.com/lprf	Video & Imaging	www.ti.com/video
		Wireless	www.ti.com/wireless

Mailing Address: Texas Instruments, Post Office Box 655303, Dallas, Texas 75265
Copyright © 2008, Texas Instruments Incorporated

Unikeyic Electronics

Global Electronic Components Distributor

Click to view pricing, inventory, delivery, and lifecycle information:

Texas Instruments:

TPS51125ARGER TPS71710DCKR TPS7A8018DRBR OPT3101RHFR SN74GTL2006PWR TLV990-28PFB BQ24314DSGR CC2520RHDR MSP430F47127IPZ MSP430F5131IDA TCAN332DR TPS92200D2DDCR ADS8344E ISO124U/1K LMV358MMX/NOPB MSP430G2332IN20 MSP430G2403IPW28 SN74LVCZ240APW MSP430F5172IRSBT UA9637ACPS UCC27210DR MSP430F2001TRSAT MSP430F2112TRHBT PCM56U SN75LV4735DBLE TLC085CDR TPA6203A1DRBR OPA2541BM DS90C383MTDX/NOPB OPA643P