Machine Safety Switches

SI-QS75 and SI-QS90 Series 75 mm and 90 mm Flat Pack Style



- Positive opening safety contacts (IEC 60947-5-1) (not dependent upon springs)
- Mechanically coded actuators use two independent operating elements to minimize intentional tampering or defeat
- Rotating head allows actuator engagement from front or back or either of two top positions
- Choice of four standard actuators; special high extraction force actuator is available as option
- IEC IP65 switch housing rating may be increased to IEC IP67 with addition of screw to wiring chamber door
- Insulated device (IEC 60947-5-1) on all models with plastic housings

Kit Model *	Actuator Type *	Interlock Body *	Contact Configuration (Actuator Engaged)	Contact Configuration (Actuator Removed)	Switching Diagrams
SI-QS90MD	SI-QS-SSA-4 In-Line Stamped	SI-QS90D	One N.C. and One N.O. Contact		
SI-QS90MFD (Direct replacement for models SI-QS90MRHD and SI-QS90MRVD)	SI-QS-SSU Flexible		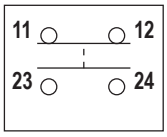	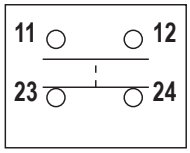	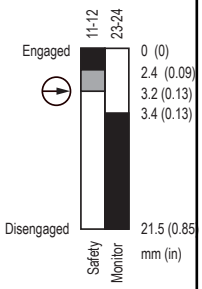
SI-QS90MDHF (High Force) **	SI-QS-SSA In-Line Die-Cast	SI-QS90DHF			
SI-QS90ME	SI-QS-SSA-4 In-Line Stamped	SI-QS90E	Two N.C. Contacts		
SI-QS90MFE (Direct replacement for models SI-QS90MRHE and SI-QS90MRVE)	SI-QS-SSU Flexible		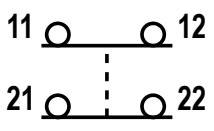	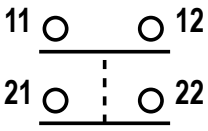	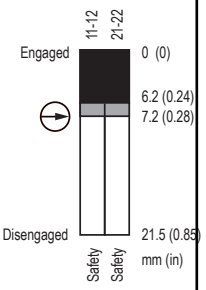
SI-QS90MEHF (High Force) **	SI-QS-SSA In-Line Die-Cast	SI-QS90EHF			

Kit Model *	Actuator Type *	Interlock Body *	Contact Configuration (Actuator Engaged)	Contact Configuration (Actuator Removed)	Switching Diagrams
SI-QS90MF	SI-QS-SSA-4 In-Line Stamped	SI-QS90F	Two N.C. and One N.O. Contact		
SI-QS90MFF (Direct replacement for models SI-QS90MRHF and SI-QS90MRVF)	SI-QS-SSU Flexible		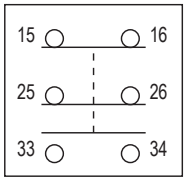	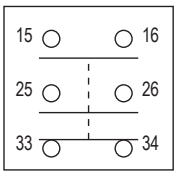	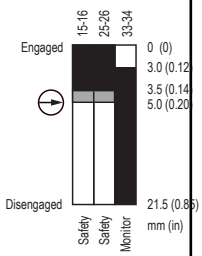
SI-QS90MFHF (High Force) **	SI-QS-SSA In-Line Die-Cast	SI-QS90FSI-QS90F			
SI-QS75MC	SI-QS-SSA-4 In-Line Stamped	SI-QS75C	One N.O. Contacts		
SI-QS75MFC (Direct replacement for models SI-QS75MRHC and SI-QS75MRVC)	SI-QS-SSU Flexible		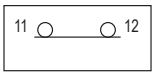	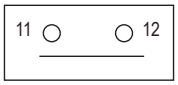	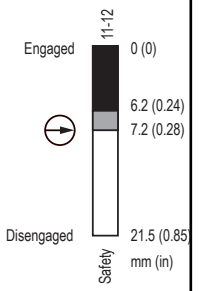
SI-QS75MCHF (High Force) **	SI-QS-SSA In-Line Die-Cast	SI-QS75CHF			

Switching Diagram Key

Contacts: Open Closed Transition

This symbol () is used in the switching diagrams to identify the point in actuator travel where the normally closed safety contact is fully open.

* A kit contains an interlock and actuator. Individual interlock bodies or actuators are for replacement purposes only. See the warning in *Accessories* on page 8.

** High Force: 50 N (11.25 lbf) holding force integrated into switch. Use SI-QS-SSA In-Line Actuator only; also see accessory SI-QS-100.

Important Information Regarding the Use of Safety Switches

In the United States, the functions that Banner safety switches are intended to perform are regulated by the Occupational Safety and Health Administration (OSHA). Whether or not any particular safety switch installation meets all applicable OSHA requirements depends upon factors that are beyond the control of Banner Engineering Corp. These factors include the details of how the safety switches are applied, installed, wired, operated, and maintained.

Banner Engineering Corp. has attempted to provide complete application, installation, operation, and maintenance instructions. This information is found in the instruction manual packaged with each safety switch. In addition, we suggest that any questions regarding the use or installation of safety switches be directed to the factory applications department at the telephone numbers or address shown below.

Banner Engineering Corp. recommends that safety switches be applied according to the guidelines set forth in international (ISO/IEC) standards listed below. Specifically, Banner Engineering Corp. recommends application of these safety switches in a configuration which meets safety category 4, per ISO 13849 (EN954-1).

In addition, the user of Banner safety switches has the responsibility to ensure that all local, state, and national laws, rules, codes, and regulations relating to the use of Banner safety switches in any particular application are satisfied. Extreme care is urged that all legal requirements have been met and that all installations and maintenance instructions are followed.

Application Assistance
Toll Free: 1-888-3-SENSOR (1-888-373-6767)

Email: sensors@bannerengineering.com
9714 Tenth Avenue North
Minneapolis, MN 55441

U.S. Regulations Applicable to Use of Banner Safety Switches
OSHA Code of Federal Regulations: Title 29, Parts 1900 to 1910

Available from: Superintendent of Documents, Government Printing Office, P.O. Box 371954, Pittsburgh, PA 15250-7954, Tel: 202-512-1800

U.S. Standards Applicable to Use of Banner Safety Switches
ANSI B11 Standards for Machine Tools Safety

Contact: Safety Director, AMT – The Association for Manufacturing Technology, 7901 Westpark Drive, McLean, VA 22102, Tel.: 703-893-2900

Applicable European and International Standards
ISO/TR 12100-1 (EN 292-1 & -2) Safety of Machinery – Basic Concepts, General Principles for Design

ISO 13852 (EN 294) Safety of Machinery—Safety Distances to Prevent Danger Zones Being Reached by the Upper Limbs

ISO 13853 (EN 811) Safety of Machinery—Safety Distances to Prevent Danger Zones Being Reached by the Lower Limbs

ISO 13849-1 (EN 954-1) Safety-Related Parts of Control Systems

ISO 13855 (EN 999) The Positioning of Protective Equipment in Respect to Approach Speeds of Parts of the Human Body

ISO 14119 (EN 1088) Interlocking Devices Associated with Guards – Principles for Design and Selection

IEC 60204-1 Electrical Equipment of Machines Part 1: General Requirements

IEC 60947-5-1 Low Voltage Switchgear – Electromechanical Control Circuit Devices

Contact: Global Engineering Documents, 15 Inverness Way East, Englewood, CO 80112-5704, Tel.: 800-854- 7179

Overview

Easy Access

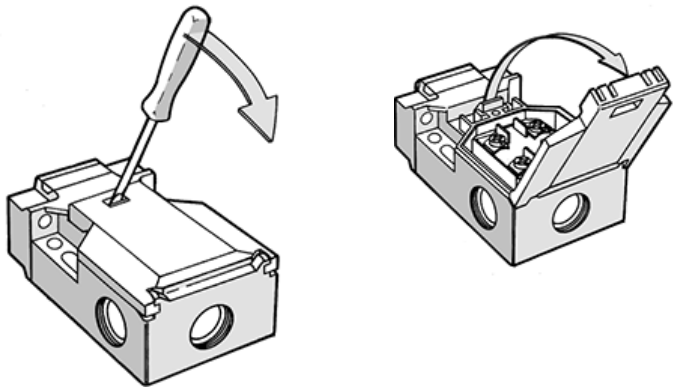

The wiring chamber is accessed via a hinged door. Simply insert a flat-blade screwdriver, as shown, and pry gently down to open.

Rotating Actuator Head

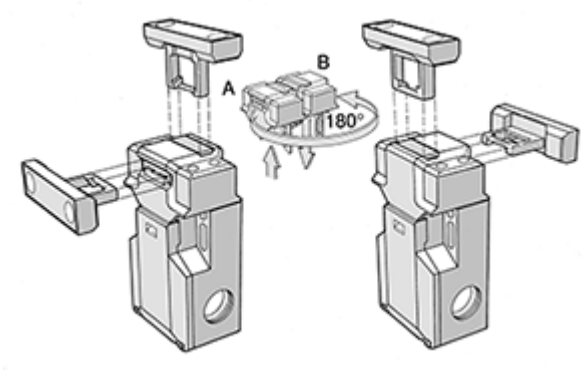

The actuator head may be rotated 180° to create four possible actuator engagement locations. To rotate the head:

1. Open the wiring chamber door, as shown.
2. Using a small flat-blade screwdriver, dislodge the two locking tabs located on the backside of the switch.
3. Lift the head straight off of the switch body.
4. Rotate the head, as shown, and reinstall it on the switch body.

Mechanical Installation

WARNING: Hazard Point
It must not be possible for personnel to reach any hazard point through an opened guard (or any opening) before hazardous machine motion has completely stopped.
Please reference OSHA CFR 1910.217 and ANSI B11 standards for information on determining safety distances and safe opening sizes for your guarding devices.

IMPORTANT: A safety switch must be installed in a manner that discourages tampering or defeat. Mount switches to prevent bypassing of the switching function at the terminal chamber. A switch and its actuator must never be used as a mechanical stop. Overtravel may cause damage to switch.

All mounting hardware is supplied by the user. The fasteners must be of sufficient strength to guard against incidental breakage. Use of permanent fasteners or locking hardware is recommended to prevent loosening or displacement of the actuator and switch body.

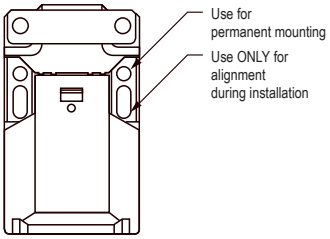

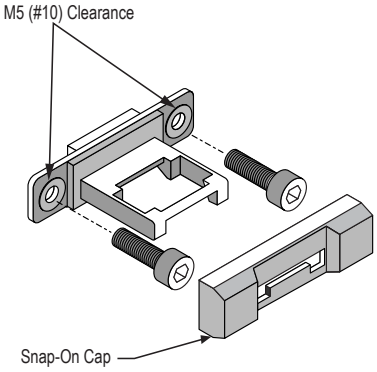

1. Temporarily mount the switch body in place, with its actuator inserted, using the slotted 5 mm holes.
   NOTE: The slotted holes in the switch body must ONLY be used for alignment during installation. The round 5 mm holes (only) must be used for permanent mounting to prevent loosening or displacement of the actuator and the switch body. Only M5 (#10) screws (user supplied), should be used.
2. Slide the switch body on its temporary fasteners to locate and mark the actuator mounting position. Remove the actuator from the switch body and mount it using tamper-resistant 5 mm (#10) hardware (e.g., Torx-head screws, rivets, etc.). Slide the switch body on its temporary fasteners to locate and mark the actuator mounting position. Remove the actuator from the switch body and mount it using tamper-resistant 5 mm (#10) hardware (e.g., Torx-head screws, rivets, etc.).
   NOTE: The non-adjustable in-line actuator includes floating sleeves in the mounting holes to allow some forgiveness for switch-to-actuator alignment. Take care to not over-tighten the actuator fasteners so as to allow this movement. This actuator also includes a snap-on cap to cover the fasteners.

3. Engage the actuator into the switch body. Align them so that the actuator is fully engaged. Fasten the switch body in place using two tamper-resistant 5 mm (#10) screws through the two round holes. Check switch engagement for misalignment and binding.

Electrical Installation



CAUTION: Electrical Installation
Two safety switches must be used for each interlock guard to achieve control reliability or Safety Category 4 (per ISO 13849-1, EN 954-1) of a machine stop circuit. Use of only one safety switch per interlock guard is not recommended.

In addition, normally-closed safety contacts from each of the two safety switches should be connected to the two separate inputs of a 2-channel safety module or safety interface. This is required to provide monitoring for safety switch contact failure, and to provide the necessary reset routine, as required by IEC 60204-1 and NFPA 79 machine safety standards.



WARNING: Series Connection of Safety Interlock Switches
Monitoring multiple guards with a series connection of safety interlock switches may result in a failure being masked or not detected at all. When such a configuration is used, periodic checks must be performed regularly to verify proper operation. All failures must be immediately corrected (e.g. immediately replacing a failed switch), or the loss of the safety stop signal or an inappropriate reset could lead to serious injury or death.

Access to the Wiring Chamber

The wiring chamber is accessed via the hinged door (see *Overview* on page 3). Select the best wiring entrance and thread in the ½" x 14 NPT conduit adapter (supplied), or the optional M20 x 1.5 or M16 x 1.5 cable gland. The switch knockout will break loose with the final turn of the conduit adapter or cable gland (i.e., as it bottoms out).

Connection to a Machine

As illustrated below, a normally-closed safety contact (i.e., a safety contact that is closed when the actuator is engaged) from each of two safety switches per interlock guard must connect to a 2-channel safety module or safety interface in order to achieve a control reliable interface to the master stop control elements of a machine. Examples of appropriate safety modules include 2-channel emergency stop (E-stop) safety modules and gate monitor safety modules.

Two functions of the safety module or safety interface are to:

1. provide a means of monitoring the contacts of both safety switches for contact failure, and to prevent the machine from restarting if either switch fails; and
2. provide a reset routine after closing the guard and returning the safety switch contacts to their closed position. This prevents the controlled machinery from restarting by simply reinserting the safety switch actuators. This necessary reset function is required by ANSI B11 and NFPA 79 machine safety standards.

Use only a positively driven, normally closed safety contact from each switch for connection to the safety module. The normally open contact may be used for control functions that are not safety-related. A typical use is to communicate with a process controller. Refer to the installation instructions provided with the safety modules for more information regarding the interface of the safety module to the machine stop control elements.

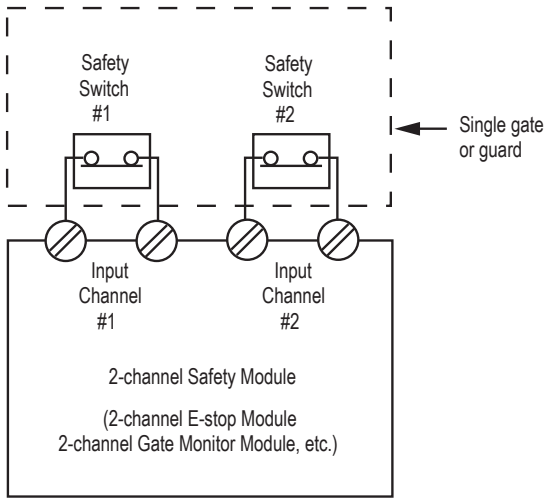

Figure 1. Connect two redundant safety switches per interlock guard to an appropriate 2-channel input safety module.

Refer to the installation instructions provided with the safety module for information regarding the interface of the safety module to the machine stop control elements.

Periodic Checks

Safety switches should be checked at each shift change or machine setup by a designated person for:

1. Breakage of the switch body or actuator,
2. Good alignment and full engagement of the actuator with the receptor,
3. Confirmation that the safety switch is not being used as an end stop,
4. Loosening of the switch or actuator mounting hardware, and
5. Verification that it is not possible to reach any hazard point through an opened guard (or any opening) before hazardous machine motion has completely stopped.

In addition, a qualified person should check for the following on a periodic schedule determined by the user based upon the severity of the operating environment and the frequency of switch actuations:

1. Check the wiring chamber for signs of contamination.
2. Check the contacts for signs of deterioration or damage.
3. Inspect the electrical wiring for continuity and damage.
4. Verify the wiring conforms to the instructions given in this datasheet.

A designated person is identified in writing by the employer as being appropriately trained to perform a specified checkout procedure. A qualified person possesses a recognized degree or certificate or has extensive knowledge, training, and experience to be able to solve problems relating to the safety switch installation (ANSI B30.2).

Repairs

Do not attempt any repairs to the Module. It contains no field-replaceable components. Return it to the factory for warranty repair or replacement by contacting Banner Factory Application Engineering. They will attempt to troubleshoot the system from your description of the problem. If they conclude a component is defective, they will issue a return merchandise authorization (RMA) number for your paperwork and give you the proper shipping address.

Pack the Module carefully. Damage that occurs in return shipping is not covered by warranty.



CAUTION: Abuse of Module After Failure
If an internal fault has occurred and the Module will not reset, **do not tap, strike, or otherwise attempt to correct the fault by a physical impact to the housing.** An internal relay may have failed in such a manner that its replacement is required.

If the Module is not immediately replaced or repaired, multiple simultaneous failures may accumulate such that the safety function can not be guaranteed.

Specifications

Contact Rating
10A @ 24V ac, 10A @ 110V ac, 6A @ 230V ac; 6A @ 24V dc
2.5 kV max. transient tolerance
NEMA A300 P300

Contact Material
Silver-nickel alloy

Maximum Switching Speed
30 operations per minute

Maximum Actuator Speed
1 m/second (39"/second)

Minimum Actuator Engagement Radius
In-line actuators: 150 mm (6 inches)
Flexible actuators: 50 mm (2 inches) in all directions

Actuator Extraction Force
High force models: 50 Newtons (11 lbf)
All other models: 10 Newtons (2.2 lbf)

Short Circuit Protection
6 amp Slow Blow, 10 amp Fast Blow. Recommended external fusing or overload protection.

Wire Connections
Screw terminals with pressure plates accept the following wire sizes –
For switches with one or two contacts: Stranded and solid: 20 AWG (0.5 mm2) to 16 AWG (1.5 mm2) for one wire; Stranded: 20 AWG (0.5 mm2) to 18 AWG (1.0 mm2) for two wires
For switches with three contacts: Stranded and solid: 20 AWG (0.5 mm2) to 18 AWG (1.0 mm2) for one wire; Stranded: 20 AWG (0.5 mm2) to 18 AWG (1.0 mm2) for two wires

Cable Entry
SI-QS75 models: M16 x 1.5 threaded entrance
SI-QS90 models: M20 x 1.5 threaded entrance
Adapter supplied to convert to ½"-14 NPT threaded entrance.

European Rating
Utilization categories: AC15 and DC13 (IEC 60947-5-1)
Switches with 1 and 2 contact pairs: Ui = 500V ac; Ith = 10 A
Switches with 3 contact pairs: Ui = 400V ac; Ith = 5A

40-60 Hz		
Ue	Ie/AC-15	Ie/DC-13
V	A	A
24	10	6
110	10	1
230	6	0.4

Mechanical Life
1 million operations

Construction
Glass fiber-reinforced polyamide thermoplastic housing; UL 94-V0 rating

Environmental Rating
IEC IP65
NOTE: Addition of a No. 3 x ¼" screw (max) to the wiring access door increases sealing to IEC IP67, NEMA 4X

Operating Conditions
Temperature: -30° to +80° C (-22° to +176° F)

Weight
SI-QS75 models: 0.11 kg (0.25 lb)
SI-QS90 models: 0.13 kg (0.29 lb)

Application Notes

Models with one and two contacts have three cable entry locations (bottom and two sides); models with three contacts have two cable entry locations (two sides). All entry locations are sealed with knockouts. To remove knockouts, thread the supplied M16 x 1.5 or M20 x 1.5 to ½"–14 NPT conduit adapter or optional M16 x 1.5 or M20 x 1.5 cable gland into one of the threaded entry locations. The knockout will break open just before the adapter or cable gland bottoms out.

Certifications

Dimensions

Front View

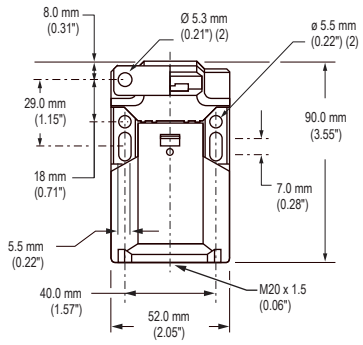

Front View

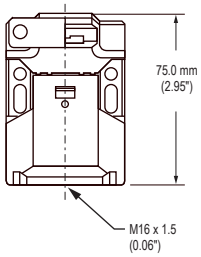

Side View

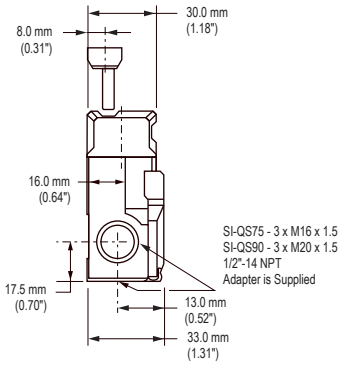

Side View with Head Rotated 180°

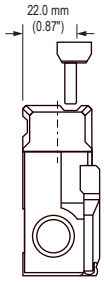

Model SI-QS-SSA In-line Actuator	Model SI-QS-SSA-4 In-line Actuator	Model SI-QS-SSU Flexible Actuator

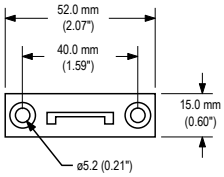

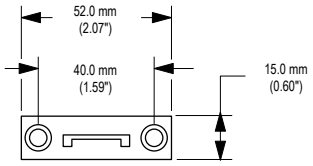

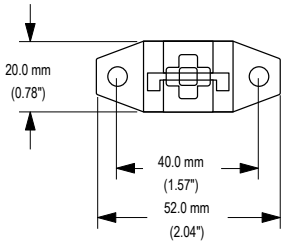

Switch and Actuator - Top View

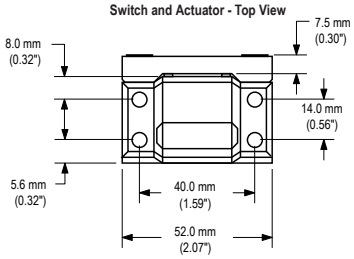

Switch and Actuator Top View

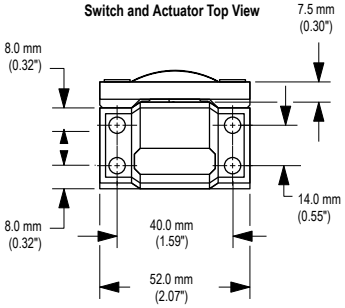

Switch and Actuator Top View

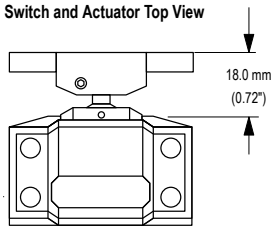

Accessories

Cable Glands

Model	Size	For Cable Diameter	Dimensions	Used With
SI-QS-CGM16	M16 × 1.5 Plastic	3.0 to 8.0 mm (0.12" to 0.31")	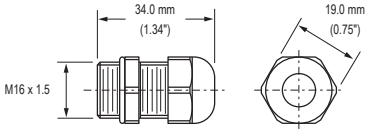	SI-QS75 Safety Interlock Switches SI-LS83 Safety Interlock Switches

Model	Size	For Cable Diameter	Dimensions	Used With
SI-QS-CGM20	M20 × 1.5 Plastic	5.0 to 12.0 mm (0.20" to 0.47")	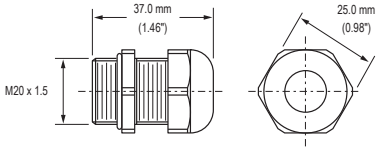	SI-QS90 Safety Interlock Switches SI-LS100 Safety Interlock Switches SI-LS31 Safety Interlock Switches SI-LS42 Safety Interlock Switches RP-LS42 Rope Pull Switches

Conduit Adapters

One conduit adapters is supplied with each switch.

Model	Size	Thread Conversion	Dimensions	Used With
SI-QS-M16	½"-14 NPT Plastic	M16 x 1.5 to ½"-14 NPT	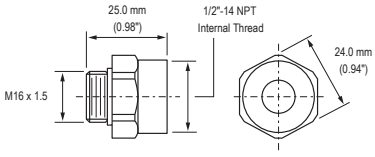	SI-QS75 Safety Interlock Switches SI-LS83 Safety Interlock Switches

Model	Size	Thread Conversion	Dimensions	Used With
SI-QS-M20	½"-14 NPT Plastic	M20 x 1.5 to ½"-14 NPT	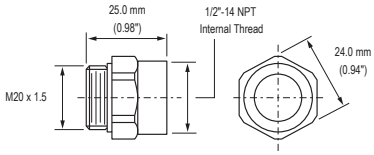	SI-QS90 Safety Interlock Switches SI-LS100 Safety Interlock Switches SI-LS31 Safety Interlock Switches SI-LS42 Safety Interlock Switches RP-LS42 Rope Pull Switches

Misc

High Force Adapter	Model	Application
	SI-QS-100	High-force accessory for in-line actuator SI-QS-SSA. Provides additional holding force for particularly heavy doors, gates, or guards. Adjustable from 50 to 100 Newtons (force). Used only for switches with in-line actuator SI-QS-SSA.

Replacement Actuators

	Model	Application
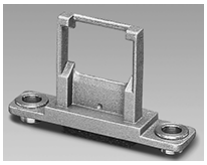	SI-QS-SSA (Inline)	For doors or covers with a radius of 150 mm (6 inches), or greater. A one-way snap-on cap is supplied to prevent unauthorized removal of the actuator mounting hardware. The actuator is die-cast stainless steel.
	SI-QS-SSA-4 (Flexible Inline)	For doors or covers with a radius of 150 mm (6 inches), or greater. A one-way snap-on cap is supplied to prevent unauthorized removal of the actuator mounting hardware. The actuator is stamped steel.
	SI-QS-SSU (Flexible)	For hinged doors with a radius of 50 mm (2 inches) or greater. Flexes in four directions. The actuator is die-cast stainless steel.
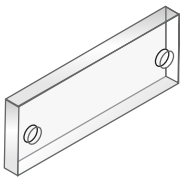	SI-QS-SSUA (Adapter Plate)	Clear acrylic adapter plate used to retrofit SI-QS-SSU to older flexible actuators SI-QS-HMA and SI-QS-VMA.

WARNING: Spare Actuators
Spare actuators must NEVER be used to bypass or otherwise defeat the protective function of a safety switch. To do so may create an unsafe situation which could lead to serious injury or death.

Banner Engineering Corp Limited Warranty

Banner Engineering Corp. warrants its products to be free from defects in material and workmanship for one year following the date of shipment. Banner Engineering Corp. will repair or replace, free of charge, any product of its manufacture which, at the time it is returned to the factory, is found to have been defective during the warranty period. This warranty does not cover damage or liability for misuse, abuse, or the improper application or installation of the Banner product.

THIS LIMITED WARRANTY IS EXCLUSIVE AND IN LIEU OF ALL OTHER WARRANTIES WHETHER EXPRESS OR IMPLIED (INCLUDING, WITHOUT LIMITATION, ANY WARRANTY OF MERCHANTABILITY OR FITNESS FOR A PARTICULAR PURPOSE), AND WHETHER ARISING UNDER COURSE OF PERFORMANCE, COURSE OF DEALING OR TRADE USAGE.

This Warranty is exclusive and limited to repair or, at the discretion of Banner Engineering Corp., replacement. **IN NO EVENT SHALL BANNER ENGINEERING CORP. BE LIABLE TO BUYER OR ANY OTHER PERSON OR ENTITY FOR ANY EXTRA COSTS, EXPENSES, LOSSES, LOSS OF PROFITS, OR ANY INCIDENTAL, CONSEQUENTIAL OR SPECIAL DAMAGES RESULTING FROM ANY PRODUCT DEFECT OR FROM THE USE OR INABILITY TO USE THE PRODUCT, WHETHER ARISING IN CONTRACT OR WARRANTY, STATUTE, TORT, STRICT LIABILITY, NEGLIGENCE, OR OTHERWISE.**

Banner Engineering Corp. reserves the right to change, modify or improve the design of the product without assuming any obligations or liabilities relating to any product previously manufactured by Banner Engineering Corp.

Unikeyic Electronics

Global Electronic Components Distributor

Click to view pricing, inventory, delivery, and lifecycle information:

Banner Engineering:

D10UNFP Q20PRQ Q25SP6FF100Q S18-2VPRL-2M SM2A312D SM31RQDP VS3RN5XLP QS18RPWLV QS18VN6FPQ5 Q20EQ Q20PDXLQ7 Q85VR3DL-T9-B SM2A312F SM2A312LVAGQD SM2A912DQD SM31EQD SMA30PELQDB Q20PLPQ7 Q60VR3AFV1000 QS18VN6DQ8 SM31RL Q85VR3LP S18SP6DLQ S18UUAQ SL30VB6VQ SMA912DQD Q45AD9LPQ SM31ELQD Q25SP6LPQ QS18VP6DQ8