TXU0202-Q1 Single-Bit Fixed Direction Voltage-Level Translator With Schmitt-Trigger Inputs and 3-State Outputs

1 Features

- Fully configurable dual-rail design allows each port to operate from 1.1 V to 5.5 V
- Up to 200 Mbps support for 3.3 V to 5.0 V
- Schmitt-trigger inputs allows for slow and noisy inputs
- Inputs with integrated static pull-down resistors prevent channels from floating
- High drive strength (up to 12 mA at 5 V)
- Low power consumption
  - 2.5 µA maximum (25°C)
  - 6 µA maximum (–40°C to 125°C)
- V_{CC} isolation and V_{CC} disconnect ($I_{off-float}$) feature
  - If either V_{CC} input is ;amplt;100 mV or disconnected, all outputs are disabled and become high-impedance
- I_{off} supports partial-power-down mode operation
- Control logic (OE) with $V_{CC(MIN)}$ circuitry allows for control from either A or B port
- Pinout compatible with TXB family level shifters
- Available in another variant that supports common applications: TXU0102
- Operating temperature from –40°C to +125°C
- Latch-up performance exceeds 100 mA per JESD 78, class II
- ESD protection exceeds JESD 22
  - 2500-V human-body model
  - 1500-V charged-device model

2 Applications

- Eliminate slow or noisy input signals
- Driving indicator LEDs or buzzers
- Debouncing a mechanical switch
- General purpose I/O level shifting
- Push-pull level shifting (UART, SPI, JTAG, and so forth)

3 Description

TXU0202-Q1 is a 2-bit, dual-supply noninverting fixed direction voltage level translation device. The Ax pins are referenced to V_{CCA} logic level, the OE pin can be referenced to either V_{CCA} or V_{CCB} logic levels, and the Bx pins are referenced to V_{CCB} logic levels. The A port can accept input voltages ranging from 1.1 V to 5.5 V, while the B port can also accept input voltages from 1.1 V to 5.5 V. Fixed direction data transmission can occur from A to B or B to A when OE is set to high in reference to either supply. When OE is set to low, all output pins are in the high-impedance state. See *Device Functional Modes* for a summary of the operation of the control logic.

Package Information(1)

PART NUMBER	PACKAGE	BODY SIZE (NOM)
TXU0202	VSSOP (DCU) (8)	2.30 mm × 2.00 mm
	SON (DTT) (8)	1.95 mm × 1.00 mm

(1) For all available packages, see the orderable addendum at the end of the data sheet.

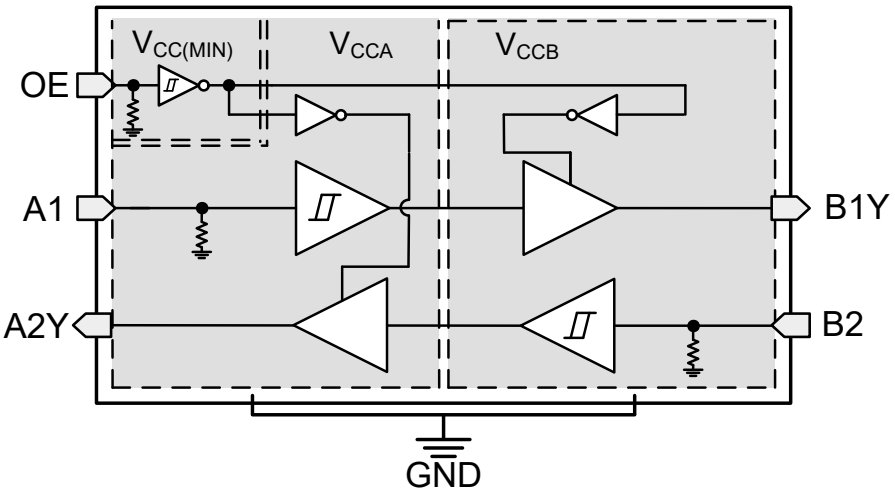

TXU0202-Q1 Functional Block Diagram

An IMPORTANT NOTICE at the end of this data sheet addresses availability, warranty, changes, use in safety-critical applications, intellectual property matters and other important disclaimers. PRODUCTION DATA.

Table of Contents

1 Features....1
2 Applications....1
3 Description....1
4 Revision History....2
5 Pin Configuration and Functions—TXU0202-Q1....3
6 Specifications....4
6.1 Absolute Maximum Ratings....4
6.2 ESD Ratings....4
6.3 Recommended Operating Conditions....5
6.4 Thermal Information....5
6.5 Electrical Characteristics....6
6.6 Switching Characteristics, V_{CCA} = 1.2 ± 0.1 V....9
6.7 Switching Characteristics, V_{CCA} = 1.5 ± 0.1 V....10
6.8 Switching Characteristics, V_{CCA} = 1.8 ± 0.15 V....11
6.9 Switching Characteristics, V_{CCA} = 2.5 ± 0.2 V....12
6.10 Switching Characteristics, V_{CCA} = 3.3 ± 0.3 V....13
6.11 Switching Characteristics, V_{CCA} = 5.0 ± 0.5 V....14
6.12 Operating Characteristics....15
6.13 Typical Characteristics....16
7 Parameter Measurement Information....17
7.1 Load Circuit and Voltage Waveforms....17
8 Detailed Description....19
8.1 Overview....19
8.2 Functional Block Diagram....19
8.3 Feature Description....20
8.4 Device Functional Modes....22
9 Application and Implementation....23
9.1 Application Information....23
9.2 Typical Application....23
10 Power Supply Recommendations....24
11 Layout....25
11.1 Layout Guidelines....25
11.2 Layout Example....25
12 Device and Documentation Support....26
12.1 Device Support....26
12.2 Documentation Support....26
12.3 Receiving Notification of Documentation Updates....26
12.4 Support Resources....26
12.5 Trademarks....26
12.6 Electrostatic Discharge Caution....26
12.7 Glossary....26
13 Mechanical, Packaging, and Orderable Information....26

4 Revision History

DATE	REVISION	NOTES
August 2022	*	Initial Release

Copyright © 2022 Texas Instruments Incorporated

5 Pin Configuration and Functions—TXU0202-Q1

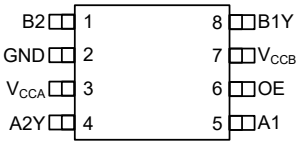

Figure 5-1. DCU Package, 8-Pin VSSOP (Top View)

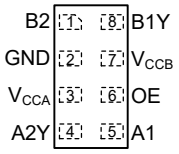

Figure 5-2. DTT Package, 8-Pin SON Transparent (Top View)

Table 5-1. TXU0202 Pin Functions

PIN		TYPE[1]	DESCRIPTION
NAME	NO.		
B2	1	I	Input B2. Referenced to V_{CCB}.
GND	2	—	Ground.
V_{CCA}	3	—	A-port supply voltage. 1.1 V ≤ V_{CCA} ≤ 5.5 V
A2Y	4	O	Output A2. Referenced to V_{CCA}.
A1	5	I	Input A1. Referenced to V_{CCA}.
OE	6	I	Output Enable. Pull to GND to place all outputs in high-impedance mode. Pull to V_{CCA} or V_{CCB} to enable all outputs.
V_{CCB}	7	—	B-port supply voltage. 1.1 V ≤ V_{CCB} ≤ 5.5 V
B1Y	8	O	Output B1. Referenced to V_{CCB}.

(1) I = input, O = output

Copyright © 2022 Texas Instruments Incorporated

6 Specifications

6.1 Absolute Maximum Ratings

over operating free-air temperature range (unless otherwise noted)(1)

			MIN	MAX	UNIT
V_{CCA}	Supply voltage A		–0.5	6.5	V
V_{CCB}	Supply voltage B		–0.5	6.5	V
V_I	Input Voltage(2)	I/O Ports (A Port)	–0.5	6.5	V
		I/O Ports (B Port)	–0.5	6.5	
		OE	–0.5	6.5	
V_O	Voltage applied to any output in the high-impedance or power-off state(2)	A Port	–0.5	6.5	V
		B Port	–0.5	6.5	
V_O	Voltage applied to any output in the high or low state(2) (3)	A Port	–0.5	V_{CCA} + 0.5	V
		B Port	–0.5	V_{CCB} + 0.5	
I_{IK}	Input clamp current	V_I < 0	–20		mA
I_{OK}	Output clamp current	V_O < 0	–20		mA
I_O	Continuous output current		–25	25	mA
	Continuous current through V_{CC} or GND		–100	100	mA
T_j	Junction Temperature			150	°C
T_{stg}	Storage temperature		–65	150	°C

(1) Operation outside the *Absolute Maximum Ratings* may cause permanent device damage. *Absolute Maximum Ratings* do not imply functional operation of the device at these or any other conditions beyond those listed under *Recommended Operating Conditions*.. If used outside the *Recommended Operating Conditions* but within the *Absolute Maximum Ratings*, the device may not be fully functional, and this may affect device reliability, functionality, performance, and shorten the device lifetime.
(2) The input voltage and output negative-voltage ratings may be exceeded if the input and output current ratings are observed.
(3) The output positive-voltage rating may be exceeded up to 6.5 V maximum if the output current rating is observed.

6.2 ESD Ratings

			VALUE	UNIT
$V_{(ESD)}$	Electrostatic discharge	Human body model (HBM), per AEC Q100-002 (1)	±2500	V
		Charged device model (CDM), per AEC Q100-011	±1500	

(1) AEC Q100-002 indicates that HBM stressing shall be in accordance with the ANSI/ESDA/JEDEC JS-001 specification.

Copyright © 2022 Texas Instruments Incorporated

6.3 Recommended Operating Conditions

over operating free-air temperature range (unless otherwise noted) (1) (2) (3)

				MIN	MAX	UNIT
V_{CCA}	Supply voltage A			1.08	5.5	V
V_{CCB}	Supply voltage B			1.08	5.5	V
I_{OH}	High-level output current		V_{CCO} = 1.1 V		–1.5	mA
			V_{CCO} = 1.4 V		–3	
			V_{CCO} = 1.65 V		–4.5	
			V_{CCO} = 2.3 V		–8	
			V_{CCO} = 3 V		–10	
			V_{CCO} = 4.5 V		–12	
I_{OL}	Low-level output current		V_{CCO} = 1.1 V		1.5	mA
			V_{CCO} = 1.4 V		3	
			V_{CCO} = 1.65 V		4.5	
			V_{CCO} = 2.3 V		8	
			V_{CCO} = 3 V		10	
			V_{CCO} = 4.5 V		12	
V_I	Input voltage (3)			0	5.5	V
V_O	Output voltage	Active State		0	V_{CCO}	V
		Tri-State		0	5.5	
T_A	Operating free-air temperature			–40	125	°C

(1) V_{CCI} is the V_{CC} associated with the input port.
(2) V_{CCO} is the V_{CC} associated with the output port.
(3) All control inputs and data I/Os of this device have weak pulldowns to ensure the line is not floating when undefined external to the device. The input leakage from these weak pulldowns is defined by the I_I specification indicated under *Electrical Characteristics*.

6.4 Thermal Information

THERMAL METRIC (1)		TXU0202-Q1		UNIT
		DCU (VSSOP)	DTT (SON)	
		8 PINS	8 PINS	
$R_{\theta JA}$	Junction-to-ambient thermal resistance	257.0	249.8	°C/W
$R_{\theta JC(top)}$	Junction-to-case (top) thermal resistance	106.9	175.2	°C/W
$R_{\theta JB}$	Junction-to-board thermal resistance	168.3	145.4	°C/W
Y_{JT}	Junction-to-top characterization parameter	47.2	32.1	°C/W
Y_{JB}	Junction-to-board characterization parameter	167.3	145.0	°C/W

(1) For more information about traditional and new thermal metrics, see the Semiconductor and IC Package Thermal Metrics application report.

Copyright © 2022 Texas Instruments Incorporated

6.5 Electrical Characteristics

over operating free-air temperature range (unless otherwise noted)(1) (2)

PARAMETER		TEST CONDITIONS	V_{CCA}	V_{CCB}	Operating free-air temperature (T_A)									UNIT
					25°C			–40°C to 85°C			–40°C to 125°C			
					MIN	TYP	MAX	MIN	TYP	MAX	MIN	TYP	MAX	
V_{T+}	Positive-going input-threshold voltage	Data Inputs (Ax, Bx) (Referenced to V_{CCI})	1.1 V	1.1 V				0.44		0.88	0.44		0.88	V
			1.4 V	1.4 V				0.60		0.98	0.60		0.98	
			1.65 V	1.65 V				0.76		1.13	0.76		1.13	
			2.3 V	2.3 V				1.08		1.56	1.08		1.56	
			3 V	3 V				1.48		1.92	1.48		1.92	
			4.5 V	4.5 V				2.19		2.74	2.19		2.74	
			5.5 V	5.5 V				2.65		3.33	2.65		3.33	
		OE (Referenced to V_{CCA} or V_{CCB})	1.1 V	1.1 V				0.44		0.88	0.44		0.88	V
			1.4 V	1.4 V				0.60		0.98	0.60		0.98	
			1.65 V	1.65 V				0.76		1.13	0.76		1.13	
			2.3 V	2.3 V				1.08		1.56	1.08		1.56	
			3 V	3 V				1.48		1.92	1.48		1.92	
			4.5 V	4.5 V				2.19		2.74	2.19		2.74	
			5.5 V	5.5 V				2.65		3.33	2.65		3.33	
V_{T-}	Negative-going input-threshold voltage	Data Inputs (Ax, Bx) (Referenced to V_{CCI})	1.1 V	1.1 V				0.17		0.48	0.17		0.48	V
			1.4 V	1.4 V				0.28		0.59	0.28		0.59	
			1.65 V	1.65 V				0.35		0.69	0.35		0.69	
			2.3 V	2.3 V				0.56		0.97	0.56		0.97	
			3 V	3 V				0.89		1.5	0.89		1.5	
			4.5 V	4.5 V				1.51		1.97	1.51		1.97	
			5.5 V	5.5 V				1.88		2.4	1.88		2.4	
		OE (Referenced to V_{CCA} or V_{CCB})	1.1 V	1.1 V				0.17		0.48	0.17		0.48	V
			1.4 V	1.4 V				0.28		0.59	0.28		0.59	
			1.65 V	1.65 V				0.35		0.69	0.35		0.69	
			2.3 V	2.3 V				0.56		0.97	0.56		0.97	
			3 V	3 V				0.89		1.5	0.89		1.5	
			4.5 V	4.5 V				1.51		1.97	1.51		1.97	
			5.5 V	5.5 V				1.88		2.46	1.88		2.46	
ΔV_T	Input-threshold hysteresis ($V_{T+} - V_{T-}$)	Data Inputs (Ax, Bx) (Referenced to V_{CCI})	1.1 V	1.1 V				0.2		0.4	0.2		0.4	V
			1.4 V	1.4 V				0.25		0.5	0.25		0.5	
			1.65 V	1.65 V				0.3		0.55	0.3		0.55	
			2.3 V	2.3 V				0.38		0.65	0.38		0.65	
			3 V	3 V				0.46		0.72	0.46		0.72	
			4.5 V	4.5 V				0.58		0.93	0.58		0.93	
			5.5 V	5.5 V				0.69		1.06	0.69		1.06	
		OE (Referenced to V_{CCA} or V_{CCB})	1.1 V	1.1 V				0.15		0.41	0.15		0.41	V
			1.4 V	1.4 V				0.2		0.5	0.2		0.5	
			1.65 V	1.65 V				0.23		0.55	0.23		0.55	
			2.3 V	2.3 V				0.32		0.65	0.32		0.65	
			3 V	3 V				0.39		0.72	0.39		0.72	
			4.5 V	4.5 V				0.57		0.97	0.57		0.97	
			5.5 V	5.5 V				0.69		1.18	0.69		1.18	

Copyright © 2022 Texas Instruments Incorporated

6.5 Electrical Characteristics (continued)

over operating free-air temperature range (unless otherwise noted)(1) (2)

PARAMETER		TEST CONDITIONS	V_{CCA}	V_{CCB}	Operating free-air temperature (T_A)									UNIT
					25°C			–40°C to 85°C			–40°C to 125°C			
					MIN	TYP	MAX	MIN	TYP	MAX	MIN	TYP	MAX	
V_{OH}	High-level output voltage (3)	I_{OH} = –0.1 mA	1.1 V – 5.5 V	1.1 V – 5.5 V				V_{CCO} – 0.1			V_{CCO} – 0.1			V
		I_{OH} = –0.5 mA	1.1 V	1.1 V				0.82			0.82			
		I_{OH} = –3 mA	1.4 V	1.4 V				1			1			
		I_{OH} = –4.5 mA	1.65 V	1.65 V				1.2			1.2			
		I_{OH} = –8 mA	2.3 V	2.3 V				1.7			1.7			
		I_{OH} = –10 mA	3 V	3 V				2.2			2.2			
		I_{OH} = –12 mA	4.5 V	4.5 V				3.7			3.7			
V_{OL}	Low-level output voltage (4)	I_{OL} = 0.1 mA	1.1 V – 5.5 V	1.1 V – 5.5 V						0.1			0.1	V
		I_{OL} = 0.5 mA	1.1 V	1.1 V						0.27			0.27	
		I_{OL} = 3 mA	1.4 V	1.4 V						0.35			0.35	
		I_{OL} = 4.5 mA	1.65 V	1.65 V						0.45			0.45	
		I_{OL} = 8 mA	2.3 V	2.3 V						0.7			0.7	
		I_{OL} = 10 mA	3 V	3 V						0.8			0.8	
		I_{OL} = 8 mA	4.5 V	4.5 V						0.55			0.55	
		I_{OL} = 12 mA	4.5 V	4.5 V						0.8			0.8	
I_I	Input leakage current	OE V_I = V_{CC} or GND	1.1 V – 5.5 V	1.1 V – 5.5 V	–0.1		1.5	–0.1		1.5	–0.1		2	µA
		Data Inputs (Ax, Bx) V_I = V_{CCI} or GND	1.1 V – 5.5 V	1.1 V – 5.5 V	–0.1		1.5	–0.1		1.5	–2		2	µA
I_{off}	Partial power down current	A Port or B Port V_I or V_O = 0 V – 5.5 V	0 V	1.1 V – 5.5 V	–1.5		1.5	–2		2	–2.5		2.5	µA
			1.1 V – 5.5 V	0 V	–1.5		1.5	–2		2	–2.5		2.5	
$I_{off-float}$	Floating supply Partial power down current	A Port or B Port V_I or V_O = GND	Floating(5)	1.1 V – 5.5 V	–1.5		1.5	–2		2	–2.5		2.5	µA
			0 V – 5.5 V	Floating(5)	–1.5		1.5	–2		2	–2.5		2.5	
I_{OZ}	Tri-state output current	A or B Port: V_I = V_{CCI} or GND V_O = V_{CCO} or GND OE = GND	1.1 V – 5.5 V	1.1 V – 5.5 V	–0.3		0.3	–1		1	–2		2	µA
I_{CCA}	V_{CCA} supply current	V_I = V_{CCI} or GND I_O = 0	1.1 V – 5.5 V	1.1 V – 5.5 V			1.5			2.5			6	µA
			0 V	5.5 V	–0.3			–1			–1			
			5.5 V	0 V			1			1.5			3	
		V_I = GND I_O = 0	5.5 V	Floating(5)			1.5			7			15	
I_{CCB}	V_{CCB} supply current	V_I = V_{CCI} or GND I_O = 0	1.1 V – 5.5 V	1.1 V – 5.5 V			1.5			2.5			6	µA
			0 V	5.5 V			1			1.5			3	
			5.5 V	0 V	–0.3			–1			–1			
		V_I = GND I_O = 0	Floating(5)	5.5 V			1.5			7			15	
I_{CCA} + I_{CCB}	Combined supply current	V_I = V_{CCI} or GND I_O = 0	1.1 V – 5.5 V	1.1 V – 5.5 V			2.5			3			6	µA
C_i	Control Input Capacitance	V_I = 3.3 V or GND	3.3 V	3.3 V		2.75			3			3.5		pF

Copyright © 2022 Texas Instruments Incorporated

6.5 Electrical Characteristics (continued)

over operating free-air temperature range (unless otherwise noted)(1) (2)

PARAMETER		TEST CONDITIONS	V_{CCA}	V_{CCB}	Operating free-air temperature (T_A)									UNIT
					25°C			–40°C to 85°C			–40°C to 125°C			
					MIN	TYP	MAX	MIN	TYP	MAX	MIN	TYP	MAX	
C_{io}	Data I/O Capacitance	OE = GND, V_O = 1.65 V DC +1 MHz −16 dBm sine wave	3.3 V	3.3 V		3			4			4		pF

(1) V_{CCI} is the V_{CC} associated with the input port.
(2) V_{CCO} is the V_{CC} associated with the output port.
(3) Tested at $V_I = V_{T+(MAX)}$.
(4) Tested at $V_I = V_{T-(MIN)}$.
(5) Floating is defined as a node that is both not actively driven by an external device and has leakage not exeeding 10 nA.

Copyright © 2022 Texas Instruments Incorporated

6.6 Switching Characteristics, V_{CCA} = 1.2 ± 0.1 V

See Figure 7-1 and Table 7-1 for test circuit and loading. See Figure 7-2, Figure 7-3, and Figure 7-4 for measurement waveforms.

PARAMETER		FROM	TO	Test Conditions	B-Port Supply Voltage (V_{CCB})														UNIT
					1.2 ± 0.1 V			1.5 ± 0.1 V			1.8 ± 0.15 V			2.5 ± 0.2 V			3.3 ± 0.3 V			5.0 ± 0.5 V			
					MIN	TYP	MAX	MIN	TYP	MAX	MIN	TYP	MAX	MIN	TYP	MAX	MIN	TYP	MAX	MIN	TYP	MAX	
t_{pd}	Propagation delay	A	B	−40°C to 85°C	3.3		96	0.5		43	0.5		37	0.5		32	0.5		30	0.5		31	ns
				−40°C to 125°C	3.3		96	0.5		43	0.5		37	0.5		32	0.5		30	0.5		31	
		B	A	−40°C to 85°C	3.3		95	1.9		80	0.5		75	0.5		70	0.5		69	0.5		69	
				−40°C to 125°C	3.3		95	1.9		80	0.5		75	0.5		70	0.5		69	0.5		69	
t_{dis}	Disable time	OE	A	−40°C to 85°C	28.8		133	28.5		130	28.4		133	28.8		137	28.4		143	18.7		211	ns
				−40°C to 125°C	28.8		133	28.5		130	28.4		133	28.8		137	28.4		143	18.7		211	
		OE	B	−40°C to 85°C	32.5		150	27.6		117	25.8		110	22.5		104	22.1		112	20.1		181	
				−40°C to 125°C	32.5		150	27.6		117	25.8		110	22.5		104	22.1		112	20.1		181	
t_{en}	Enable time	OE	A	−40°C to 85°C	24.1		237	22.1		229	21.4		230	21.3		232	21.7		235	22.7		244	ns
				−40°C to 125°C	24.1		237	22.1		229	21.4		230	21.3		232	21.7		235	22.7		244	
		OE	B	−40°C to 85°C	21.3		237	14.3		152	11.2		140	8.8		130	8.2		130	8.4		132	
				−40°C to 125°C	21.3		237	14.3		152	11.2		140	8.8		130	8.2		130	8.4		132	

Copyright © 2022 Texas Instruments Incorporated

6.7 Switching Characteristics, V_{CCA} = 1.5 ± 0.1 V

See Figure 7-1 and Table 7-1 for test circuit and loading. See Figure 7-2, Figure 7-3, and Figure 7-4 for measurement waveforms.

PARAMETER		FROM	TO	Test Conditions	B-Port Supply Voltage (V_{CCB})																	UNIT
					1.2 ± 0.1 V			1.5 ± 0.1 V			1.8 ± 0.15 V			2.5 ± 0.2 V			3.3 ± 0.3 V			5.0 ± 0.5 V			
					MIN	TYP	MAX	MIN	TYP	MAX	MIN	TYP	MAX	MIN	TYP	MAX	MIN	TYP	MAX	MIN	TYP	MAX	
t_{pd}	Propagation delay	A	B	−40°C to 85°C	1.9		80	0.5		31	0.5		25	0.5		19	0.5		17	0.5		15	ns
				−40°C to 125°C	1.9		80	0.5		31	0.5		25	0.5		20	0.5		18	0.5		16	
		B	A	−40°C to 85°C	0.5		43	0.5		31	0.5		28	0.5		26	0.5		25	0.5		24	
				−40°C to 125°C	0.5		43	0.5		31	0.5		28	0.5		26	0.5		25	0.5		24	
t_{dis}	Disable time	OE	A	−40°C to 85°C	20.0		91	19.0		82	18.8		81	19.2		82	19.6		83	12.2		90	ns
				−40°C to 125°C	20.0		95	19.0		86	18.8		85	19.2		87	19.6		88	12.2		92	
		OE	B	−40°C to 85°C	27.4		127	21.7		91	19.9		82	16.3		71	15.9		71	13.7		70	
				−40°C to 125°C	27.4		127	21.7		95	19.9		86	16.3		75	15.9		75	13.7		74	
t_{en}	Enable time	OE	A	−40°C to 85°C	14.9		102	14.4		86	13.5		88	12.7		90	12.6		92	13.2		97	ns
				−40°C to 125°C	14.9		102	14.4		89	13.5		91	12.7		93	12.6		96	13.2		100	
		OE	B	−40°C to 85°C	17.9		175	12.7		80	9.1		69	6.1		57	4.9		53	4.5		54	
				−40°C to 125°C	17.9		175	12.7		81	9.1		71	6.1		60	4.9		56	4.5		57	

Copyright © 2022 Texas Instruments Incorporated

6.8 Switching Characteristics, V_{CCA} = 1.8 ± 0.15 V

See Figure 7-1 and Table 7-1 for test circuit and loading. See Figure 7-2, Figure 7-3, and Figure 7-4 for measurement waveforms.

PARAMETER		FROM	TO	Test Conditions	B-Port Supply Voltage (V_{CCB})																	UNIT
					1.2 ± 0.1 V			1.5 ± 0.1 V			1.8 ± 0.15 V			2.5 ± 0.2 V			3.3 ± 0.3 V			5.0 ± 0.5 V			
					MIN	TYP	MAX	MIN	TYP	MAX	MIN	TYP	MAX	MIN	TYP	MAX	MIN	TYP	MAX	MIN	TYP	MAX	
t_{pd}	Propagation delay	A	B	−40°C to 85°C	0.5		75	0.5		28	0.5		22	0.5		17	0.5		14	0.5		12	ns
				−40°C to 125°C	0.5		75	0.5		28	0.5		23	0.5		17	0.5		15	0.5		13	
		B	A	−40°C to 85°C	0.5		37	0.5		25	0.5		22	0.5		19	0.5		19	0.5		18	
				−40°C to 125°C	0.5		37	0.5		25	0.5		23	0.5		20	0.5		19	0.5		19	
t_{dis}	Disable time	OE	A	−40°C to 85°C	17.2		79	14.7		67	14.5		65	14.3		65	14.4		66	8.5		71	ns
				−40°C to 125°C	17.2		83	14.7		71	14.5		69	14.3		70	14.4		71	8.5		75	
		OE	B	−40°C to 85°C	25.4		121	18.7		81	16.5		71	12.8		60	12.5		58	9.8		55	
				−40°C to 125°C	25.4		123	18.7		86	16.5		76	12.8		64	12.5		62	9.8		59	
t_{en}	Enable time	OE	A	−40°C to 85°C	10.9		88	9.5		66	9.4		63	8.6		65	8.2		66	8.1		69	ns
				−40°C to 125°C	10.9		88	9.5		69	9.4		67	8.6		68	8.2		70	8.1		73	
		OE	B	−40°C to 85°C	16.7		177	10.4		75	8.1		58	4.9		46	3.3		42	2.2		39	
				−40°C to 125°C	16.7		177	10.4		77	8.1		60	4.9		49	3.3		44	2.2		42	

Copyright © 2022 Texas Instruments Incorporated

6.9 Switching Characteristics, V_{CCA} = 2.5 ± 0.2 V

See Figure 7-1 and Table 7-1 for test circuit and loading. See Figure 7-2, Figure 7-3, and Figure 7-4 for measurement waveforms.

PARAMETER		FROM	TO	Test Conditions	B-Port Supply Voltage (V_{CCB})														UNIT
					1.2 ± 0.1 V			1.5 ± 0.1 V			1.8 ± 0.15 V			2.5 ± 0.2 V			3.3 ± 0.3 V			5.0 ± 0.5 V			
					MIN	TYP	MAX	MIN	TYP	MAX	MIN	TYP	MAX	MIN	TYP	MAX	MIN	TYP	MAX	MIN	TYP	MAX	
t_{pd}	Propagation delay	A	B	−40°C to 85°C	0.5		70	0.5		26	0.5		20	0.5		14	0.5		12	0.5		9	ns
				−40°C to 125°C	0.5		70	0.5		26	0.5		20	0.5		14	0.5		12	0.5		10	
		B	A	−40°C to 85°C	0.5		32	0.5		19	0.5		17	0.5		14	0.5		13	0.5		13	
				−40°C to 125°C	0.5		32	0.5		20	0.5		17	0.5		14	0.5		13	0.5		13	
t_{dis}	Disable time	OE	A	−40°C to 85°C	12.9		65	10.5		51	9.0		51	8.1		43	8.4		44	5.0		45	ns
				−40°C to 125°C	12.9		68	10.5		55	9.0		50	8.1		47	8.4		48	5.0		49	
		OE	B	−40°C to 85°C	23.2		112	16.5		74	14.0		61	9.0		46	9.1		44	6.4		39	
				−40°C to 125°C	23.2		115	16.5		79	14.0		66	9.0		51	9.1		48	6.4		43	
t_{en}	Enable time	OE	A	−40°C to 85°C	7.9		80	5.9		50	5.1		44	4.7		39	4.4		40	3.7		41	ns
				−40°C to 125°C	7.9		80	5.9		53	5.1		47	4.7		42	4.4		43	3.7		44	
		OE	B	−40°C to 85°C	16.3		183	9.2		74	6.0		54	4.0		36	2.1		31	0.5		27	
				−40°C to 125°C	16.3		183	9.2		76	6.0		57	4.0		38	2.1		33	0.5		29	

Copyright © 2022 Texas Instruments Incorporated

6.10 Switching Characteristics, V_{CCA} = 3.3 ± 0.3 V

See Figure 7-1 and Table 7-1 for test circuit and loading. See Figure 7-2, Figure 7-3, and Figure 7-4 for measurement waveforms.

PARAMETER		FROM	TO	Test Conditions	B-Port Supply Voltage (V_{CCB})																		UNIT
					1.2 ± 0.1 V			1.5 ± 0.1 V			1.8 ± 0.15 V			2.5 ± 0.2 V			3.3 ± 0.3 V			5.0 ± 0.5 V			
					MIN	TYP	MAX	MIN	TYP	MAX	MIN	TYP	MAX	MIN	TYP	MAX	MIN	TYP	MAX	MIN	TYP	MAX	
t_{pd}	Propagation delay	A	B	−40°C to 85°C	0.5		69	0.5		25	0.5		19	0.5		13	0.5		11	0.5		8	ns
				−40°C to 125°C	0.5		69	0.5		25	0.5		19	0.5		13	0.5		11	0.5		9	
		B	A	−40°C to 85°C	0.5		30	0.5		17	0.5		14	0.5		12	0.5		11	0.5		10	
				−40°C to 125°C	0.5		30	0.5		18	0.5		15	0.5		12	0.5		11	0.5		10	
t_{dis}	Disable time	OE	A	−40°C to 85°C	12.9		62	10.1		47	8.7		42	6.9		39	6.6		39	6.9		40	ns
				−40°C to 125°C	12.9		65	10.1		51	8.7		46	6.9		40	6.6		40	6.9		40	
		OE	B	−40°C to 85°C	22.7		109	15.7		71	13.2		59	8.5		42	7.6		40	4.7		36	
				−40°C to 125°C	22.7		111	15.7		75	13.2		63	8.5		46	7.6		43	4.7		36	
t_{en}	Enable time	OE	A	−40°C to 85°C	6.6		85	4.2		45	3.0		37	2.4		31	2.2		30	1.7		30	ns
				−40°C to 125°C	6.6		85	4.2		47	3.0		40	2.4		33	2.2		32	1.7		33	
		OE	B	−40°C to 85°C	16.3		192	8.9		76	5.4		55	2.6		34	1.8		27	0.5		22	
				−40°C to 125°C	16.3		192	8.9		78	5.4		57	2.6		36	1.8		29	0.5		24	

Copyright © 2022 Texas Instruments Incorporated

6.11 Switching Characteristics, V_{CCA} = 5.0 ± 0.5 V

See Figure 7-1 and Table 7-1 for test circuit and loading. See Figure 7-2, Figure 7-3, and Figure 7-4 for measurement waveforms.

PARAMETER		FROM	TO	Test Conditions	B-Port Supply Voltage (V_{CCB})														UNIT
					1.2 ± 0.1 V			1.5 ± 0.1 V			1.8 ± 0.15 V			2.5 ± 0.2 V			3.3 ± 0.3 V			5.0 ± 0.5 V			
					MIN	TYP	MAX	MIN	TYP	MAX	MIN	TYP	MAX	MIN	TYP	MAX	MIN	TYP	MAX	MIN	TYP	MAX	
t_{pd}	Propagation delay	A	B	−40°C to 85°C	0.5		69	0.5		24	0.5		18	0.5		13	0.5		10	0.5		8	ns
				−40°C to 125°C	0.5		69	0.5		24	0.5		19	0.5		13	0.5		11	0.5		8	
		B	A	−40°C to 85°C	0.5		31	0.5		15	0.5		12	0.5		9	0.5		8	0.5		8	
				−40°C to 125°C	0.5		31	0.5		16	0.5		13	0.5		10	0.5		9	0.5		8	
t_{dis}	Disable time	OE	A	−40°C to 85°C	10.8		60	7.7		42	5.9		38	4.2		31	3.4		31	2.8		30	ns
				−40°C to 125°C	10.8		62	7.7		46	5.9		40	4.2		33	3.4		33	2.8		32	
		OE	B	−40°C to 85°C	9.7		109	5.9		69	13.2		56	8.4		40	6.9		37	3.7		30	
				−40°C to 125°C	9.7		111	5.9		73	13.2		60	8.4		43	6.9		39	3.7		33	
t_{en}	Enable time	OE	A	−40°C to 85°C	6.0		102	2.8		44	1.2		33	0.5		25	0.5		22	0.5		21	ns
				−40°C to 125°C	6.0		102	2.8		46	1.2		36	0.5		27	0.5		24	0.5		23	
		OE	B	−40°C to 85°C	16.7		212	8.8		82	4.8		58	1.6		35	0.5		26	0.5		19	
				−40°C to 125°C	16.7		212	8.8		83	4.8		60	1.6		37	0.5		28	0.5		21	

Copyright © 2022 Texas Instruments Incorporated

6.12 Operating Characteristics

T_A = 25°C (1)

PARAMETER		Test Conditions	Supply Voltage (V_{CCB} = V_{CCA})						UNIT
			1.2 ± 0.1 V	1.5 ± 0.1 V	1.8 ± 0.15 V	2.5 ± 0.2 V	3.3 ± 0.3 V	5.0 ± 0.5 V	
			TYP	TYP	TYP	TYP	TYP	TYP	
C_{pdA} (2)	A to B: outputs enabled	A Port CL = 0, RL = Open f = 10 MHz t_{rise} = t_{fall} = 1 ns	2	2	2	2	2	3	pF
	A to B: outputs disabled		2	2	2	2	2	3	
	B to A: outputs enabled		12	12	12	13	13	16	
	B to A: outputs disabled		2	2	2	2	2	3	
C_{pdB} (3)	A to B: outputs enabled	B Port CL = 0, RL = Open f = 10 MHz t_{rise} = t_{fall} = 1 ns	12	12	12	13	13	16	pF
	A to B: outputs disabled		2	2	2	2	2	3	
	B to A: outputs enabled		2	2	2	2	2	3	
	B to A: outputs disabled		2	2	2	2	2	3	

(1) See the *CMOS Power Consumption and C_{pd} Calculation* application report for additional information about how power dissipation capacitance affects power consumption.
(2) A-Port power dissipation capacitance per transceiver.
(3) B-Port power dissipation capacitance per transceiver.

Copyright © 2022 Texas Instruments Incorporated

6.13 Typical Characteristics

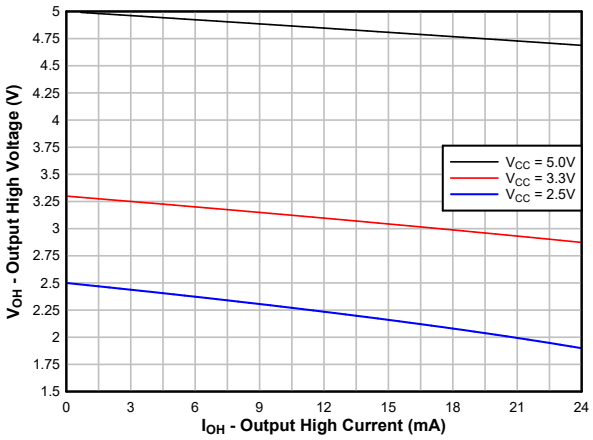

Figure 6-1. Typical (T_A=25°C) Output High Voltage (V_{OH}) vs Source Current (I_{OH})

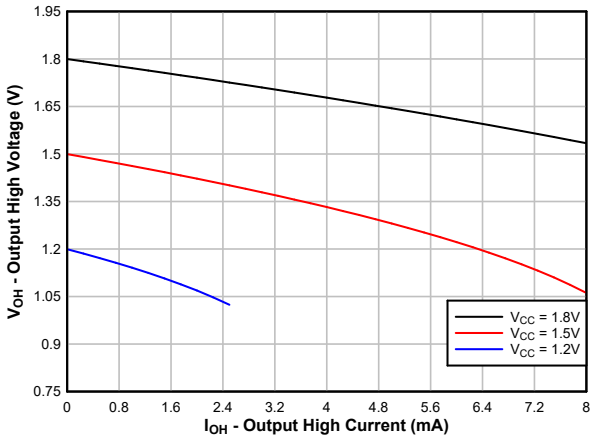

Figure 6-2. Typical (T_A=25°C) Output High Voltage (V_{OH}) vs Source Current (I_{OH})

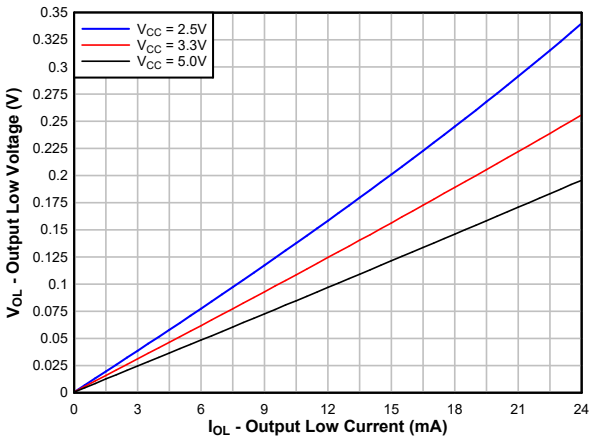

Figure 6-3. Typical (T_A=25°C) Output Low Voltage (V_{OL}) vs Sink Current (I_{OL})

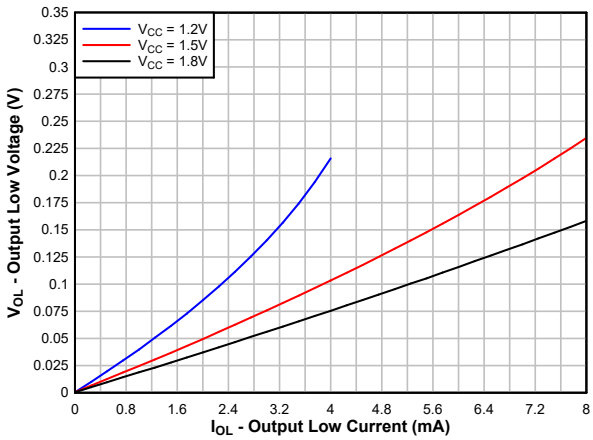

Figure 6-4. Typical (T_A=25°C) Output Low Voltage (V_{OL}) vs Sink Current (I_{OL})

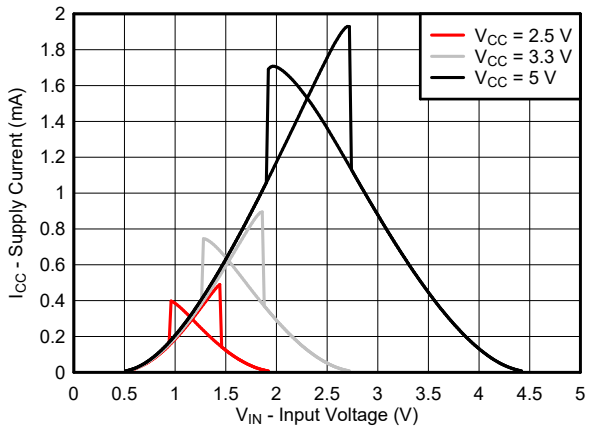

Figure 6-5. Typical (T_A=25°C) Supply Current (I_{CC}) vs Input Voltage (V_{IN})

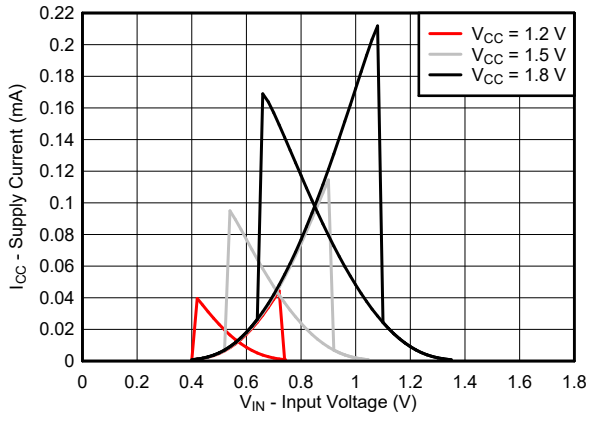

Figure 6-6. Typical (T_A=25°C) Supply Current (I_{CC}) vs Input Voltage (V_{IN})

Copyright © 2022 Texas Instruments Incorporated

7 Parameter Measurement Information

7.1 Load Circuit and Voltage Waveforms

Unless otherwise noted, generators supply all input pulses that have the following characteristics:

- f = 1 MHz
- Z_O = 50 Ω
- Δt/ΔV ≤ 1 ns/V

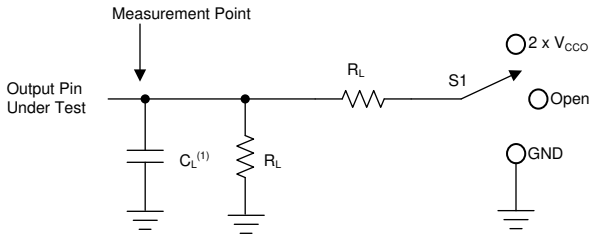

1. C_L includes probe and jig capacitance.

Figure 7-1. Load Circuit

Table 7-1. Load Circuit Conditions

Parameter		V_{CCO}	R_L	C_L	S_1	V_{TP}
t_{pd}	Propagation (delay) time	1.1 V – 5.5 V	10 kΩ	5 pF	Open	N/A
t_{en}, t_{dis}	Enable time, disable time	1.1 V – 1.6 V	10 kΩ	5 pF	2 × V_{CCO}	0.1 V
		1.65 V – 2.7 V	10 kΩ	5 pF	2 × V_{CCO}	0.15 V
		3.0 V – 5.5 V	10 kΩ	5 pF	2 × V_{CCO}	0.3 V
t_{en}, t_{dis}	Enable time, disable time	1.1 V – 1.6 V	10 kΩ	5 pF	GND	0.1 V
		1.65 V – 2.7 V	10 kΩ	5 pF	GND	0.15 V
		3.0 V – 5.5 V	10 kΩ	5 pF	GND	0.3 V

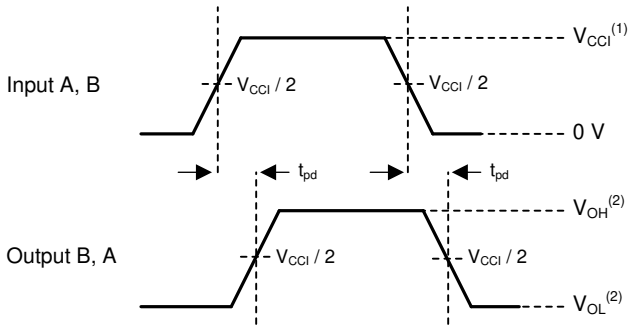

1. V_{CCI} is the supply pin associated with the input port.
2. V_{OH} and V_{OL} are typical output voltage levels that occur with specified R_L, C_L, and S_1

Figure 7-2. Propagation Delay

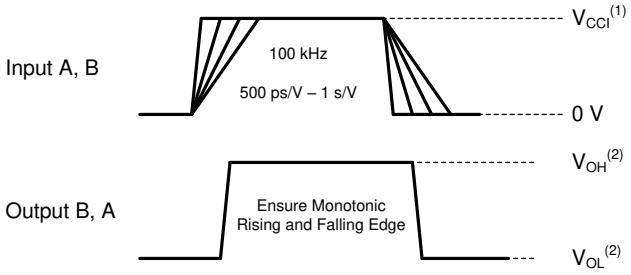

1. V_{CCI} is the supply pin associated with the input port.
2. V_{OH} and V_{OL} are typical output voltage levels that occur with specified R_L, C_L, and S_1

Figure 7-3. Input Transition Rise and Fall Rate

Copyright © 2022 Texas Instruments Incorporated

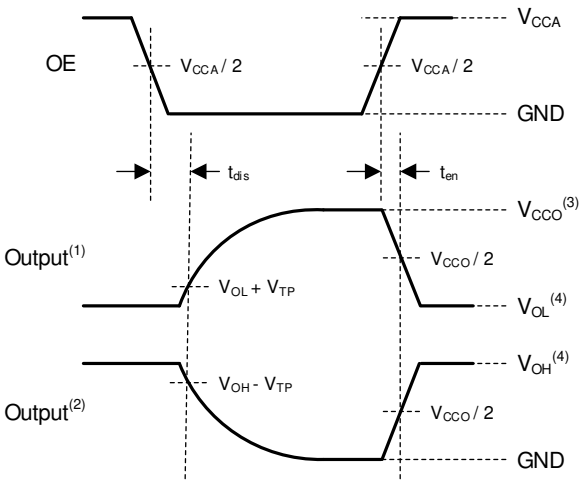

1. Output waveform on the condition that input is driven to a valid Logic Low.
2. Output waveform on the condition that input is driven to a valid Logic High.
3. V_{CCO} is the supply pin associated with the output port.
4. V_{OH} and V_{OL} are typical output voltage levels with specified R_L, C_L, and S_1.

Figure 7-4. Enable Time And Disable Time

Copyright © 2022 Texas Instruments Incorporated

8 Detailed Description

8.1 Overview

The TXU0202-Q1 is a 4-bit translating transceiver that uses two individually configurable power-supply rails. The device is operational with V_{CCA} and V_{CCB} supplies as low as 1.1 V and as high as 5.5 V. Additionally, the device can be operated with V_{CCA} = V_{CCB}. The A port is designed to track V_{CCA}, and the B port is designed to track V_{CCB}.

The TXU0202-Q1 device is designed for asynchronous communication between data buses, and transmits data with fixed direction from the A bus to the B bus on some channels and from the B bus to the A bus on the remaining channels. The output-enable input (OE) is used to disable the outputs so the buses are effectively isolated. The output-enable pin of the TXU0202-Q1 (OE) can be referenced to either V_{CCA} or V_{CCB}. The OE pin can be left floating or externally pulled down to ground to ensure the high-impedance state of the level shifter outputs during power up or power down.

This device is fully specified for partial-power-down applications using the I_{off} current. The I_{off} protection circuitry ensures that no excessive current is drawn from or sourced into an input or output while the device is powered down.

The VCC isolation or VCC disconnect feature ensures that if either VCC is less than 100 mV or disconnected with the complementary supply within recommended operating conditions, then the outputs disable and are set to the high-impedance state while the supply current is maintained. The $I_{off-float}$ circuitry ensures that no excessive current is drawn from or sourced into an input or output while the supply is floating.

Glitch-free power supply sequencing allows either supply rail to be powered on or off in any order while providing robust power sequencing performance.

8.2 Functional Block Diagram

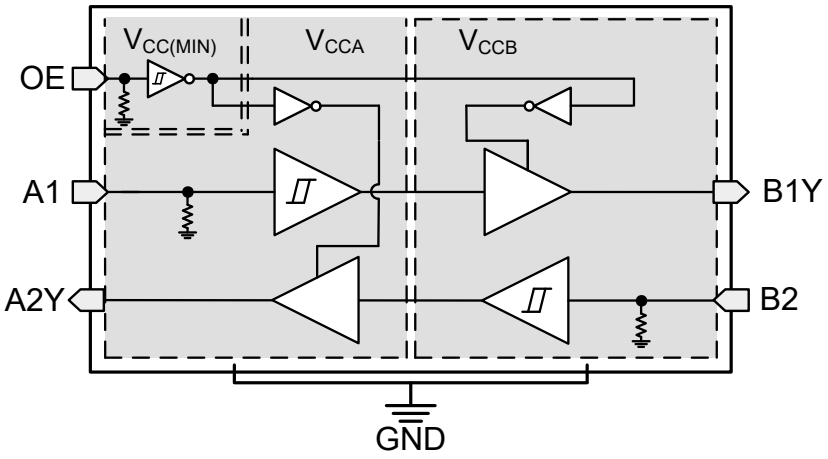

8.3 Feature Description

8.3.1 CMOS Schmitt-Trigger Inputs with Integrated Pulldowns

Standard CMOS inputs are high impedance and are typically modeled as a resistor in parallel with the input capacitance given in the *Electrical Characteristics*. The worst case resistance is calculated with the maximum input voltage, given in the *Absolute Maximum Ratings*, and the maximum input leakage current, given in the *Electrical Characteristics*, using ohm's law (R = V ÷ I).

The Schmitt-trigger input architecture provides hysteresis as defined by ΔV_T in the *Electrical Characteristics*, which makes this device extremely tolerant to slow or noisy inputs. Driving the inputs slowly will increase dynamic current consumption of the device. See *Understanding Schmitt Triggers* for additional information regarding Schmitt-trigger inputs.

8.3.1.1 Inputs with Integrated Static Pull-Down Resistors

This device has 5 MΩ typical integrated weak pull-downs for each input. This feature allows all inputs to be left floating without the concern for unstable outputs or increased current consumption. This also helps to reduce external component count for applications where not all channels are used or need to be fixed low. If an external pull-up is required, it should be no larger than 1 MΩ to avoid contention with the 5 MΩ internal pull-down.

8.3.2 Control Logic (OE) with $V_{CC(MIN)}$ Circuitry

The output-enable input (OE) is used to disable the outputs so the buses are effectively isolated. The output-enable pin of the TXU0x04 has $V_{CC(MIN)}$ circuitry, which allows the OE pin to operate with the lower supply voltage. The *Over-Voltage Tolerant Inputs* feature allows the OE pin to operate with the higher supply voltage. This combination means that the enable pin can be referenced to either V_{CCA} or V_{CCB} supply. Multiple permutations of each device are possible since the controller can be placed on either the A or B port and can still control the enable pin.

8.3.3 Balanced High-Drive CMOS Push-Pull Outputs

A balanced output allows the device to sink and source similar currents. The high drive capability of this device creates fast edges into light loads, so routing and load conditions should be considered to prevent ringing. Additionally, the outputs of this device are capable of driving larger currents than the device can sustain without being damaged. The electrical and thermal limits that must be followed at all times are defined in *Absolute Maximum Ratings*.

8.3.4 VCC Isolation and V_{CC} Disconnect

The outputs for this device disable and enter a high-impedance state when either supply is <100 mV or left floating (disconnected), with the complementary supply within the recommended operating conditions. It is recommended to keep the inputs low before floating (disconnecting) either supply.

The $I_{CCx(floating)}$ in the *Electrical Characteristics* specifies the maximum supply current. The $I_{off(float)}$ in the *Electrical Characteristics* specifies the maximum leakage into or out of any input or output pin on the device.

Copyright © 2022 Texas Instruments Incorporated

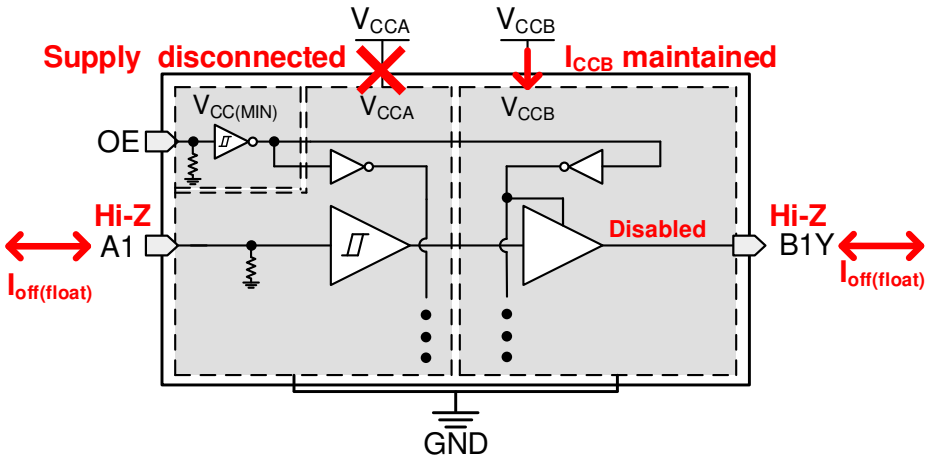

Figure 8-1. V_{CC} Disconnect Feature

8.3.5 Over-Voltage Tolerant Inputs

Input signals to this device can be driven above the supply voltage as long as they remain below the maximum input voltage value specified in the *Recommended Operating Conditions*.

8.3.6 Glitch-Free Power Supply Sequencing

Either supply rail may be powered on or off in any order without producing a glitch on the inputs or outputs (that is, where the output erroneously transitions to VCC when it should be held low or vice versa). Glitches of this nature can be misinterpreted by a peripheral as a valid data bit, which could trigger a false device reset of the peripheral, a false device configuration of the peripheral, or even a false data initialization by the peripheral.

Copyright © 2022 Texas Instruments Incorporated

8.3.7 Negative Clamping Diodes

Figure 8-2 shows the inputs and outputs to this device that have negative clamping diodes.

CAUTION

Voltages beyond the values specified in the *Absoulte Maximum Ratings* table can cause damage to the device. The input negative-voltage and output voltage ratings may be exceeded if the input and output clamp-current ratings are observed.

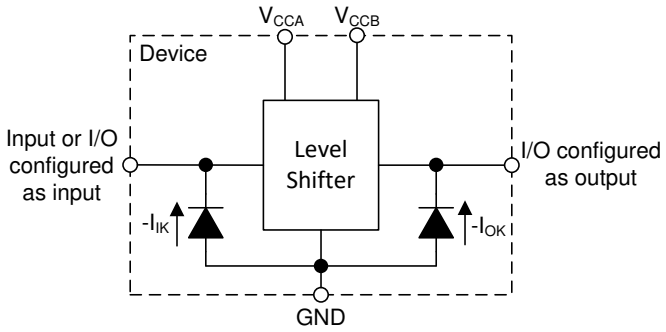

Figure 8-2. Electrical Placement of Clamping Diodes for Each Input and Output

8.3.8 Fully Configurable Dual-Rail Design

The V_{CCA} and V_{CCB} pins can be supplied at any voltage from 1.1 V to 5.5 V, making the device suitable for translating between any of the voltage nodes (1.2 V, 1.5 V, 1.8 V, 3.3 V, and 5.0 V).

8.3.9 Supports High-Speed Translation

The TXU0202-Q1 device can support high data-rate applications. The translated signal data rate can be up to 200 Mbps when the signal is translated from 3.3 V to 5.0 V.

8.4 Device Functional Modes

Table 8-1. Function Table

CONTROL INPUTS	Port Status		OPERATION
OE	Input	Output	
H	L	L	Unidirectional non-inverting voltage translation
H	H	H	Unidirectional non-inverting voltage translation
L	X	Hi-Z	Isolation

Copyright © 2022 Texas Instruments Incorporated

9 Application and Implementation

Note

Information in the following applications sections is not part of the TI component specification, and TI does not warrant its accuracy or completeness. TI's customers are responsible for determining suitability of components for their purposes, as well as validating and testing their design implementation to confirm system functionality.

9.1 Application Information

The TXU0202-Q1 device can be used in level-translation applications for interfacing devices or systems operating at different interface voltages with one another. The TXU0202-Q1 device is ideal for use in applications where a push-pull driver is connected to the data Inputs. The maximum data rate can be up to 200 Mbps when the device translates a signal from 3.3 V to 5.0 V.

9.2 Typical Application

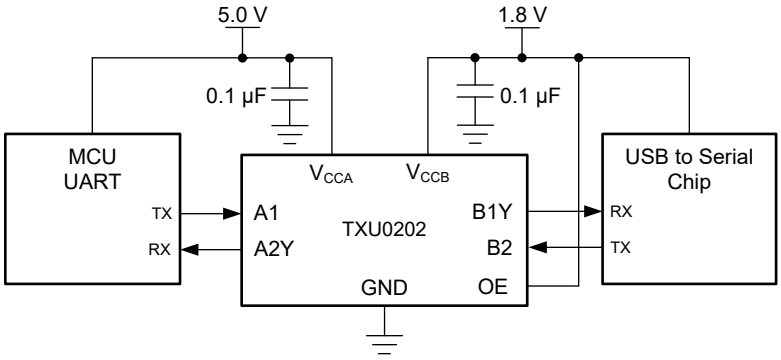

Figure 9-1. TXU0202-Q1 LED Driver Application

9.2.1 Design Requirements

Use the parameters listed in Table 9-1 for this design example.

Table 9-1. Design Parameters

DESIGN PARAMETERS	EXAMPLE VALUES
Input voltage range	1.1 V to 5.5 V
Output voltage range	1.1 V to 5.5 V

9.2.2 Detailed Design Procedure

To begin the design process, determine the following:

- Input voltage range
  - Use the supply voltage of the device that is driving the TXU0202-Q1 device to determine the input voltage range. For a valid logic-high, the value must exceed the positive-going input-threshold voltage (V_{T+}) of the input port. For a valid logic low the value must be less than the negative-going input-threshold voltage (V_{T-}) of the input port.
- Output voltage range
  - Use the supply voltage of the device that the TXU0202-Q1 device is driving to determine the output voltage range.

Copyright © 2022 Texas Instruments Incorporated

9.2.3 Application Curve

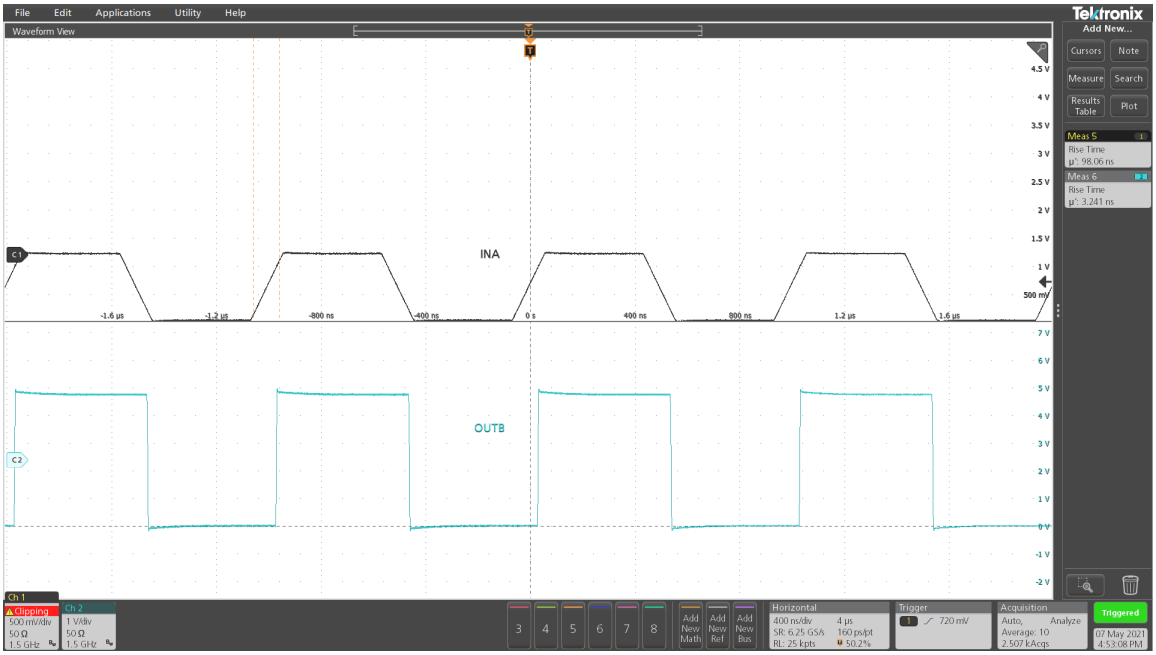

Figure 9-2. Up Translation at 1 MHz (1.2 V to 5 V)

10 Power Supply Recommendations

Always apply a ground reference to the GND pins first. This device is designed for glitch free power sequencing without any supply sequencing requirements such as ramp order or ramp rate.

Glitch-Free Power Supply Sequencing describes how this device was designed with various power supply sequencing methods in mind to help prevent unintended triggering of downstream devices.

Copyright © 2022 Texas Instruments Incorporated

11 Layout

11.1 Layout Guidelines

To ensure reliability of the device, following common printed-circuit board layout guidelines is recommended:

- Use bypass capacitors on the power supply pins and place them as close to the device as possible. A 0.1 µF capacitor is recommended, but transient performance can be improved by having 1 µF and 0.1 µF capacitors in parallel as bypass capacitors.
- The high drive capability of this device creates fast edges into light loads so routing and load conditions should be considered to prevent ringing.

11.2 Layout Example

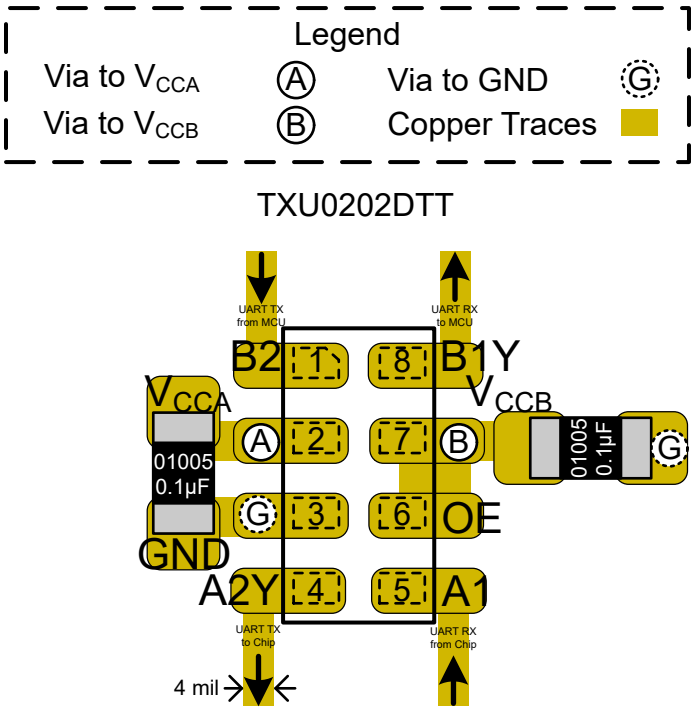

Figure 11-1. Layout Example – TXU0202-Q1

12 Device and Documentation Support

12.1 Device Support

12.1.1 Regulatory Requirements

No statutory or regulatory requirements apply to this device.

There are no special characteristics for this product.

12.2 Documentation Support

12.2.1 Related Documentation

- Texas Instruments, *Understanding Schmitt Triggers* application report
- Texas Instruments, *CMOS Power Consumption and C_{pd} Calculation* application report

12.3 Receiving Notification of Documentation Updates

To receive notification of documentation updates, navigate to the device product folder on ti.com. Click on *Subscribe to updates* to register and receive a weekly digest of any product information that has changed. For change details, review the revision history included in any revised document.

12.4 Support Resources

TI E2E™ support forums are an engineer's go-to source for fast, verified answers and design help — straight from the experts. Search existing answers or ask your own question to get the quick design help you need.

Linked content is provided "AS IS" by the respective contributors. They do not constitute TI specifications and do not necessarily reflect TI's views; see TI's Terms of Use.

12.5 Trademarks

TI E2E™ is a trademark of Texas Instruments.
All trademarks are the property of their respective owners.

12.6 Electrostatic Discharge Caution



This integrated circuit can be damaged by ESD. Texas Instruments recommends that all integrated circuits be handled with appropriate precautions. Failure to observe proper handling and installation procedures can cause damage.

ESD damage can range from subtle performance degradation to complete device failure. Precision integrated circuits may be more susceptible to damage because very small parametric changes could cause the device not to meet its published specifications.

12.7 Glossary

TI Glossary	This glossary lists and explains terms, acronyms, and definitions.

13 Mechanical, Packaging, and Orderable Information

The following pages include mechanical, packaging, and orderable information. This information is the most current data available for the designated devices. This data is subject to change without notice and revision of this document. For browser-based versions of this data sheet, refer to the left-hand navigation.

Copyright © 2022 Texas Instruments Incorporated

PACKAGING INFORMATION

Orderable Device	Status (1)	Package Type	Package Drawing	Pins	Package Qty	Eco Plan (2)	Lead finish/ Ball material (6)	MSL Peak Temp (3)	Op Temp (°C)	Device Marking (4/5)	Samples
TXU0202QDCURQ1	ACTIVE	VSSOP	DCU	8	3000	RoHS & Green	NIPDAU	Level-1-260C-UNLIM	-40 to 125		Samples
TXU0202QDTTRQ1	ACTIVE	X1SON	DTT	8	5000	RoHS & Green	NIPDAUAG	Level-1-260C-UNLIM	-40 to 125	1LU	Samples

(1) The marketing status values are defined as follows:
ACTIVE: Product device recommended for new designs.
LIFEBUY: TI has announced that the device will be discontinued, and a lifetime-buy period is in effect.
NRND: Not recommended for new designs. Device is in production to support existing customers, but TI does not recommend using this part in a new design.
PREVIEW: Device has been announced but is not in production. Samples may or may not be available.
OBSOLETE: TI has discontinued the production of the device.

(2) **RoHS:** TI defines "RoHS" to mean semiconductor products that are compliant with the current EU RoHS requirements for all 10 RoHS substances, including the requirement that RoHS substance do not exceed 0.1% by weight in homogeneous materials. Where designed to be soldered at high temperatures, "RoHS" products are suitable for use in specified lead-free processes. TI may reference these types of products as "Pb-Free".
RoHS Exempt: TI defines "RoHS Exempt" to mean products that contain lead but are compliant with EU RoHS pursuant to a specific EU RoHS exemption.
Green: TI defines "Green" to mean the content of Chlorine (Cl) and Bromine (Br) based flame retardants meet JS709B low halogen requirements of <=1000ppm threshold. Antimony trioxide based flame retardants must also meet the <=1000ppm threshold requirement.

(3) MSL, Peak Temp. - The Moisture Sensitivity Level rating according to the JEDEC industry standard classifications, and peak solder temperature.

(4) There may be additional marking, which relates to the logo, the lot trace code information, or the environmental category on the device.

(5) Multiple Device Markings will be inside parentheses. Only one Device Marking contained in parentheses and separated by a "~" will appear on a device. If a line is indented then it is a continuation of the previous line and the two combined represent the entire Device Marking for that device.

(6) Lead finish/Ball material - Orderable Devices may have multiple material finish options. Finish options are separated by a vertical ruled line. Lead finish/Ball material values may wrap to two lines if the finish value exceeds the maximum column width.

Important Information and Disclaimer: The information provided on this page represents TI's knowledge and belief as of the date that it is provided. TI bases its knowledge and belief on information provided by third parties, and makes no representation or warranty as to the accuracy of such information. Efforts are underway to better integrate information from third parties. TI has taken and continues to take reasonable steps to provide representative and accurate information but may not have conducted destructive testing or chemical analysis on incoming materials and chemicals. TI and TI suppliers consider certain information to be proprietary, and thus CAS numbers and other limited information may not be available for release.

In no event shall TI's liability arising out of such information exceed the total purchase price of the TI part(s) at issue in this document sold by TI to Customer on an annual basis.

OTHER QUALIFIED VERSIONS OF TXU0202-Q1 :

- Catalog : TXU0202

NOTE: Qualified Version Definitions:

- Catalog - TI's standard catalog product

TAPE AND REEL INFORMATION

REEL DIMENSIONS

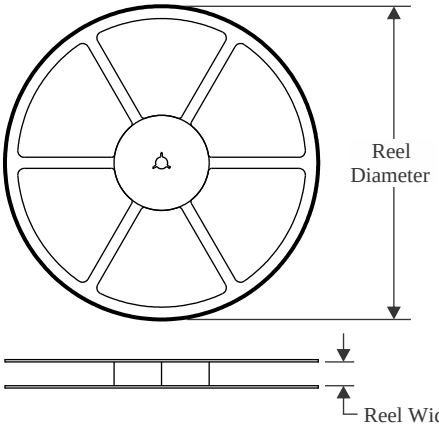

TAPE DIMENSIONS

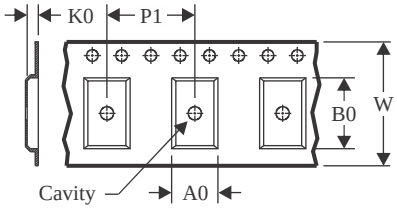

A0	Dimension designed to accommodate the component width
B0	Dimension designed to accommodate the component length
K0	Dimension designed to accommodate the component thickness
W	Overall width of the carrier tape
P1	Pitch between successive cavity centers

QUADRANT ASSIGNMENTS FOR PIN 1 ORIENTATION IN TAPE

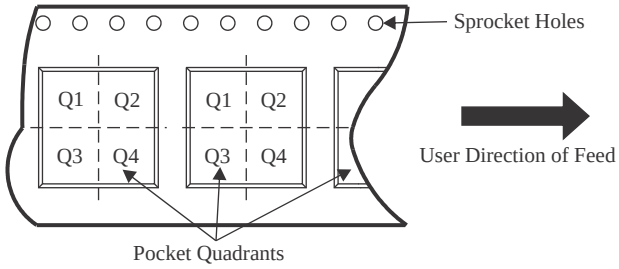

*All dimensions are nominal

Device	Package Type	Package Drawing	Pins	SPQ	Reel Diameter (mm)	Reel Width W1 (mm)	A0 (mm)	B0 (mm)	K0 (mm)	P1 (mm)	W (mm)	Pin1 Quadrant
TXU0202QDCURQ1	VSSOP	DCU	8	3000	178.0	9.0	2.25	3.35	1.05	4.0	8.0	Q3
TXU0202QDTTRQ1	X1SON	DTT	8	5000	178.0	8.4	1.17	2.17	0.63	4.0	8.0	Q1

TAPE AND REEL BOX DIMENSIONS

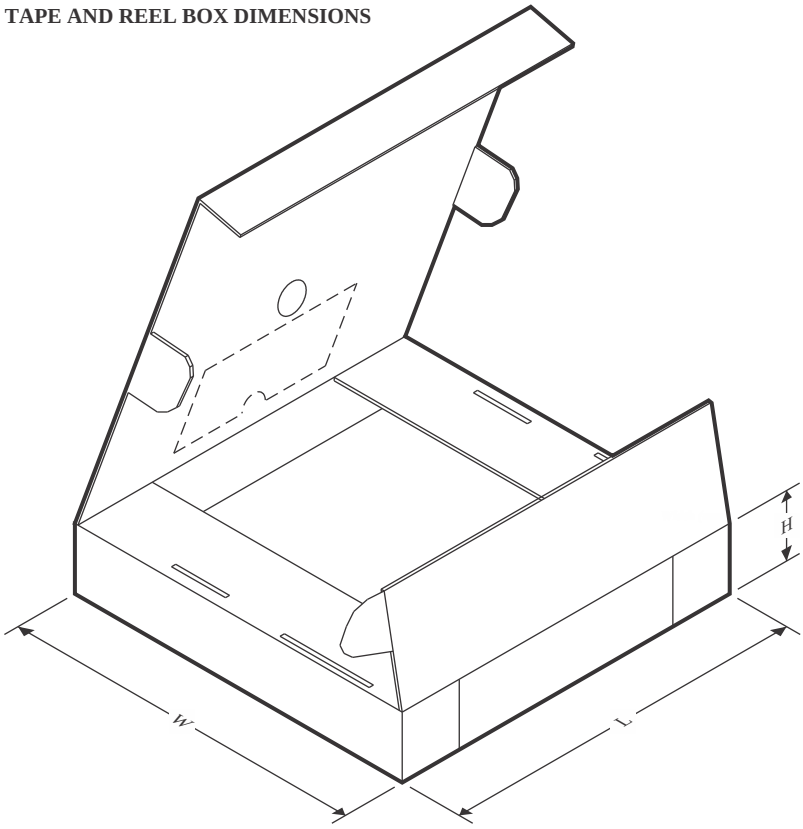

*All dimensions are nominal

Device	Package Type	Package Drawing	Pins	SPQ	Length (mm)	Width (mm)	Height (mm)
TXU0202QDCURQ1	VSSOP	DCU	8	3000	180.0	180.0	18.0
TXU0202QDTTRQ1	X1SON	DTT	8	5000	205.0	200.0	33.0

DCU0008A



PACKAGE OUTLINE

VSSOP - 0.9 mm max height

SMALL OUTLINE PACKAGE

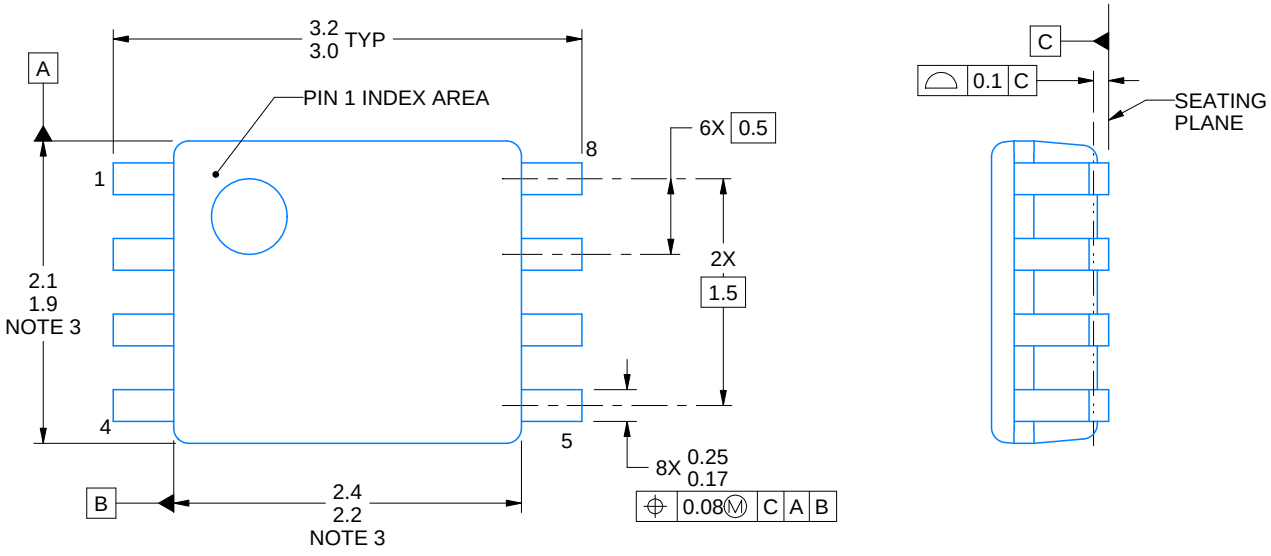

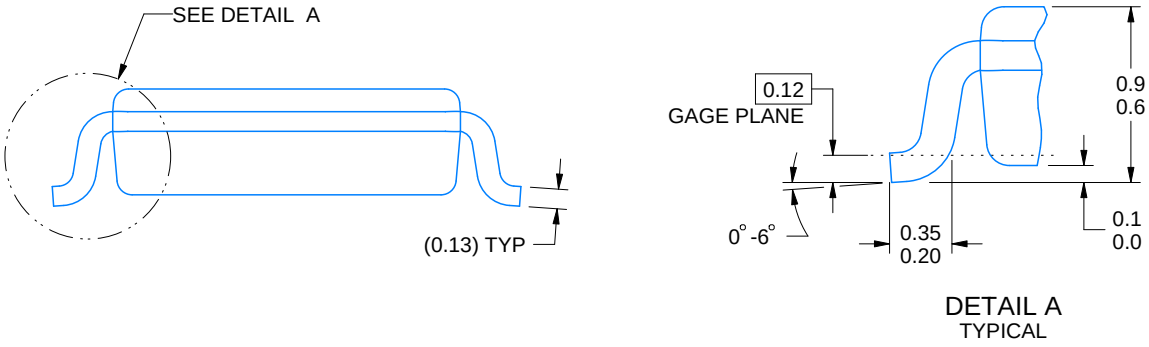

4225266/A 09/2014

NOTES:

1. All linear dimensions are in millimeters. Any dimensions in parenthesis are for reference only. Dimensioning and tolerancing per ASME Y14.5M.
2. This drawing is subject to change without notice.
3. This dimension does not include mold flash, protrusions, or gate burrs. Mold flash, protrusions, or gate burrs shall not exceed 0.15 mm per side.
4. Reference JEDEC registration MO-187 variation CA.

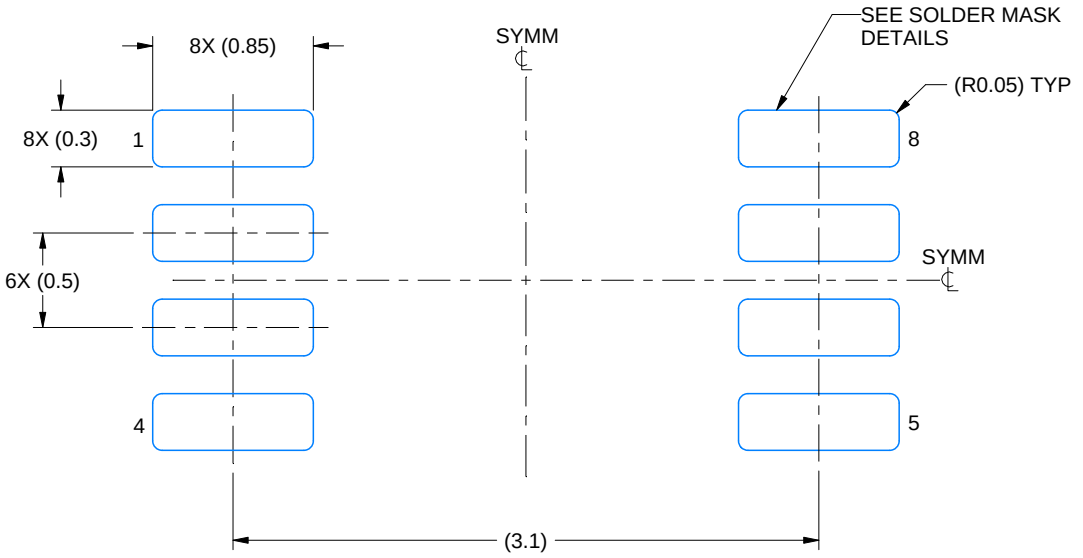

LAND PATTERN EXAMPLE
EXPOSED METAL SHOWN
SCALE: 25X

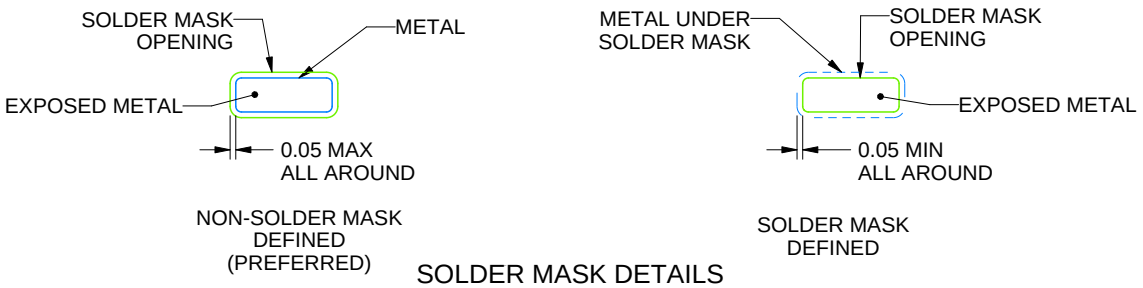

SOLDER MASK DETAILS

4225266/A 09/2014

NOTES: (continued)

5. Publication IPC-7351 may have alternate designs.
6. Solder mask tolerances between and around signal pads can vary based on board fabrication site.

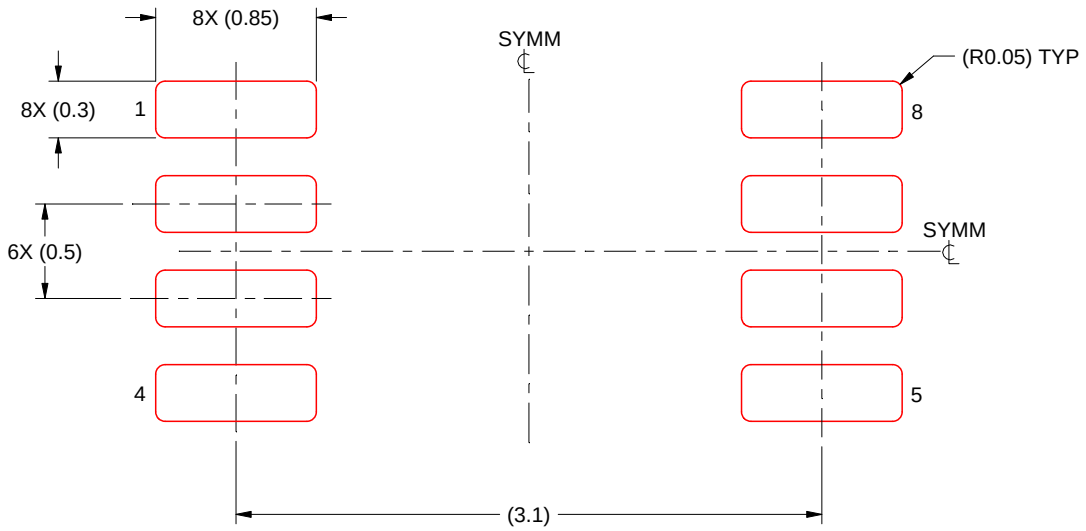

SOLDER PASTE EXAMPLE
BASED ON 0.125 mm THICK STENCIL
SCALE: 25X

4225266/A 09/2014

NOTES: (continued)

7. Laser cutting apertures with trapezoidal walls and rounded corners may offer better paste release. IPC-7525 may have alternate design recommendations.
8. Board assembly site may have different recommendations for stencil design.

DTT0008A

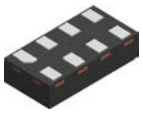

PACKAGE OUTLINE

X1SON - 0.5 mm max height

PLASTIC SMALL OUTLINE - NO LEAD

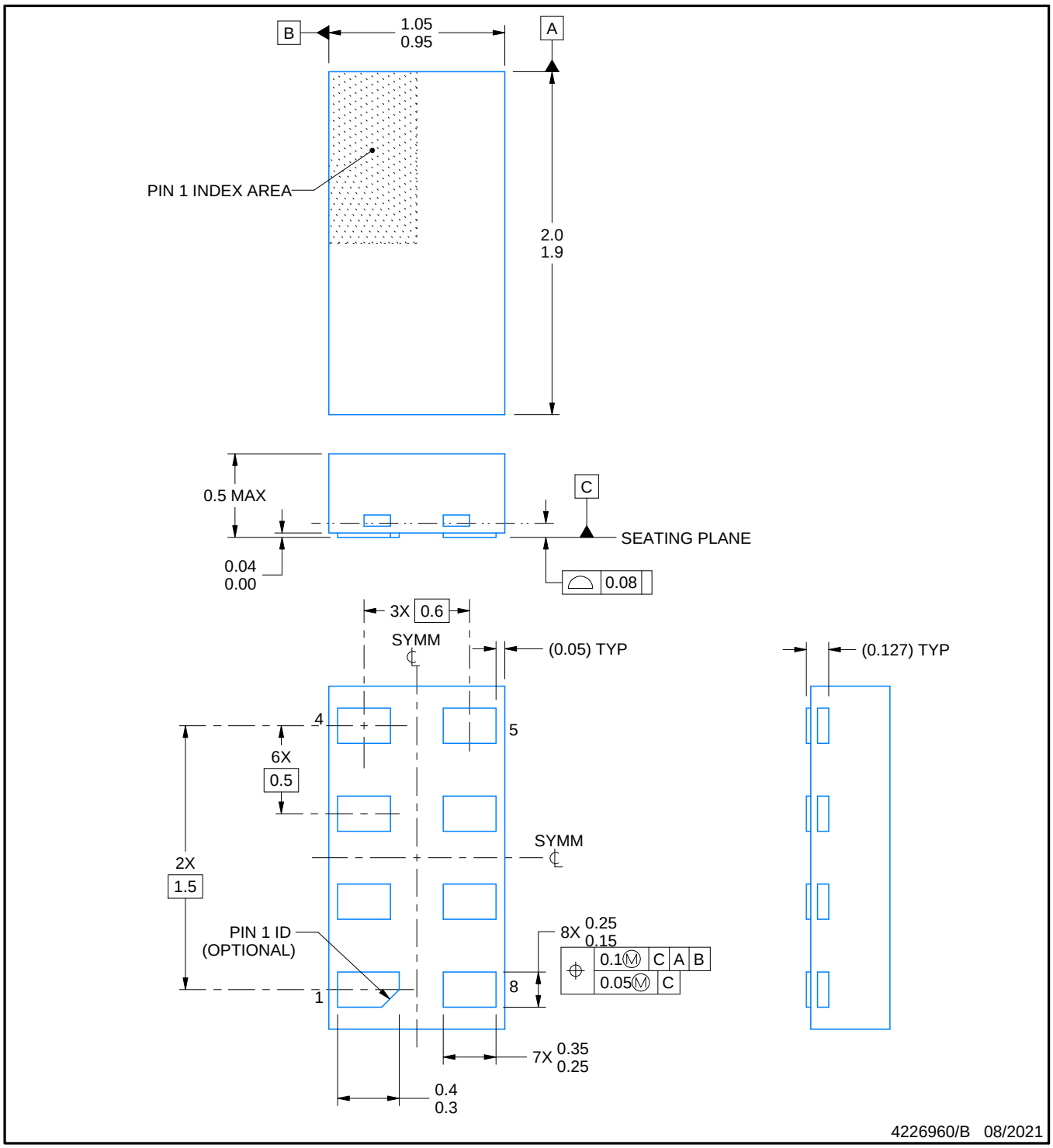

NOTES:

1. All linear dimensions are in millimeters. Any dimensions in parenthesis are for reference only. Dimensioning and tolerancing per ASME Y14.5M.
2. This drawing is subject to change without notice.

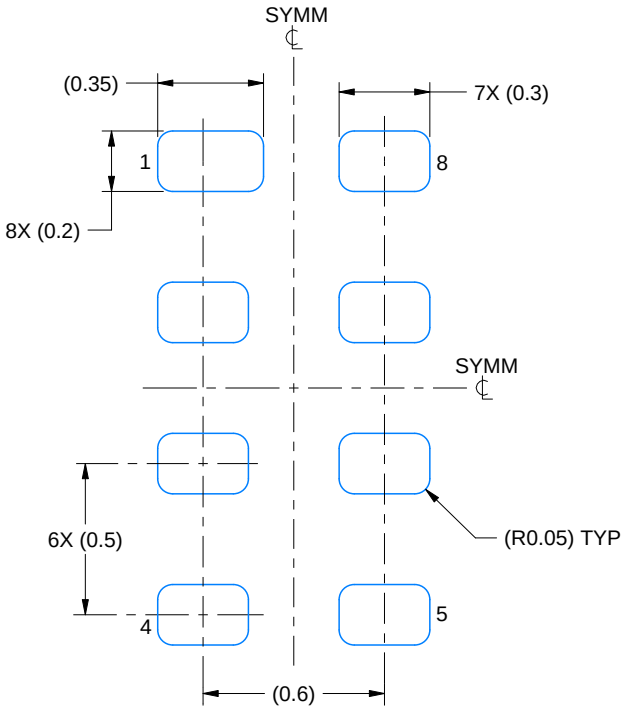

LAND PATTERN EXAMPLE
1:1 RATIO WITH PKG SOLDER PADS
EXPOSED METAL SHOWN
SCALE:40X

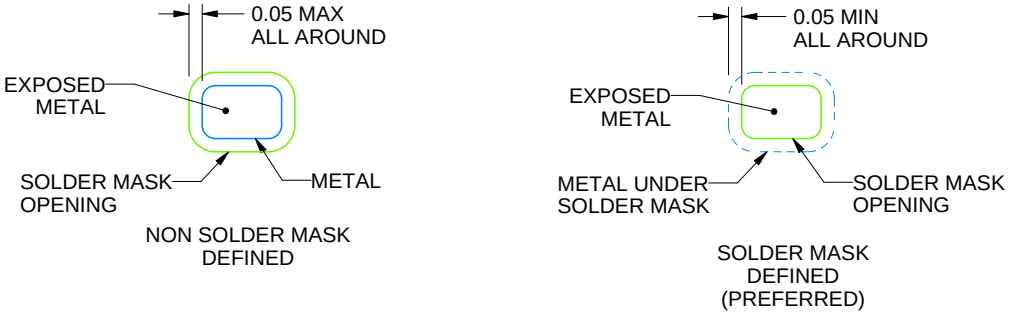

SOLDER MASK DETAILS

4226960/B 08/2021

NOTES: (continued)

3. For more information, see QFN/SON PCB application report in literature No. SLUA271 (www.ti.com/lit/slua271).

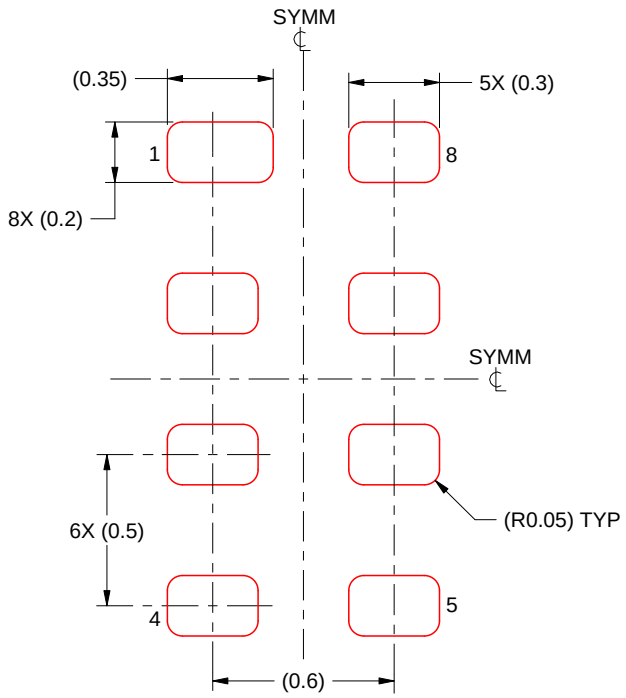

SOLDER PASTE EXAMPLE
BASED ON 0.075 - 0.1 mm THICK STENCIL
SCALE:40X

4226960/B 08/2021

NOTES: (continued)

4. Laser cutting apertures with trapezoidal walls and rounded corners may offer better paste release. IPC-7525 may have alternate design recommendations.

IMPORTANT NOTICE AND DISCLAIMER

TI PROVIDES TECHNICAL AND RELIABILITY DATA (INCLUDING DATA SHEETS), DESIGN RESOURCES (INCLUDING REFERENCE DESIGNS), APPLICATION OR OTHER DESIGN ADVICE, WEB TOOLS, SAFETY INFORMATION, AND OTHER RESOURCES “AS IS” AND WITH ALL FAULTS, AND DISCLAIMS ALL WARRANTIES, EXPRESS AND IMPLIED, INCLUDING WITHOUT LIMITATION ANY IMPLIED WARRANTIES OF MERCHANTABILITY, FITNESS FOR A PARTICULAR PURPOSE OR NON-INFRINGEMENT OF THIRD PARTY INTELLECTUAL PROPERTY RIGHTS.

These resources are intended for skilled developers designing with TI products. You are solely responsible for (1) selecting the appropriate TI products for your application, (2) designing, validating and testing your application, and (3) ensuring your application meets applicable standards, and any other safety, security, regulatory or other requirements.

These resources are subject to change without notice. TI grants you permission to use these resources only for development of an application that uses the TI products described in the resource. Other reproduction and display of these resources is prohibited. No license is granted to any other TI intellectual property right or to any third party intellectual property right. TI disclaims responsibility for, and you will fully indemnify TI and its representatives against, any claims, damages, costs, losses, and liabilities arising out of your use of these resources.

TI’s products are provided subject to TI’s Terms of Sale or other applicable terms available either on ti.com or provided in conjunction with such TI products. TI’s provision of these resources does not expand or otherwise alter TI’s applicable warranties or warranty disclaimers for TI products.

TI objects to and rejects any additional or different terms you may have proposed.

Mailing Address: Texas Instruments, Post Office Box 655303, Dallas, Texas 75265
Copyright © 2023, Texas Instruments Incorporated

Unikeyic Electronics

Global Electronic Components Distributor

Click to view pricing, inventory, delivery, and lifecycle information:

Texas Instruments:

ISO124U/1K LM5110-2M/NOPB THMC50DBQR OPA643P SN74AS832BDW TPS3307-25DGNR INA228AIDGSR LM4050CEM3-5.0 SN74AS1034ANSR SN74ALS1640AN RI-I02-114B-01 SN74ACT3631-15PQ SN74ACT7807-20FN SN74ALS258ADR TPS2835PWPR DRV8821DCA LM311PW TPA005D14DCA TPS25200DRVR UCC3752D BQ25616RTWR TL074IDR TPS3809I50DBVR TVP5150AM1PBSR TL750L12CP TLV2451IDBVR MSP430F5438AIPZR OPA2330AIDRBT SN74ALS257AD SN74ALVC244PWE4