

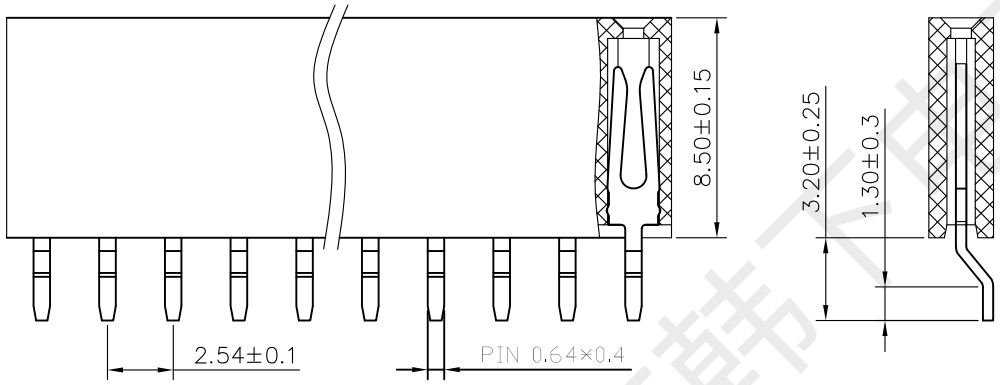

SPECIFICATIONS

Current Rating:	3Amps
Insulation Resistance:	1000MΩ Min
Contact Resistance:	20mΩ Max
Withstanding Voltage:	AC 1000V
Operation Temperature:	-40° to+105°
Contact Material:	Brass
Standard:	PA6T
Insrlator Material:	Polyester(UL 94V-0)
Contact Plating:	Gold Flash
Max.Processing Temp:	240° C for30-60seconds (260° C for5seconds)

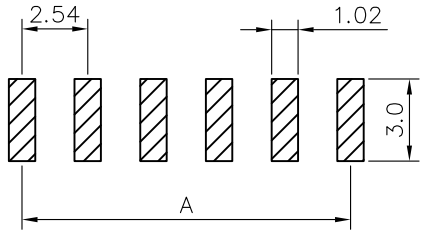

RECOMMEND P.C.B LAYOUT

PCB TOLERANCE:±0.05 (TOP VIEW)

深圳市韩下电子有限公司

UNLESS OTHEWIXE SPECIFIED TOLERANCE
X :±0.30 X° :±5°
X.X :±0.25 X.X° :±1°
X.XX:±0.20 X.XX° :±0.5°

DRAWM NAME: HX PM2.54-1x2P WT

SIZE	A4	SCALE	N:1	PROUCT NO.		
REV	A	UNIT	mm	PROJECT		PAGE 1/1

DRAW:	黄彬	2024/08/13	CHECKED:	张伟	2024/08/13	APPROVED: 罗小春 2024/08/13

No. of	DIM. A	DIM. B	No. of	DIM. A	DIM. B	No. of	DIM. A	DIM. B	No. of	DIM. A	DIM. B
1	0.00	2.54	11	25.40	27.94	21	50.80	53.34	31	76.20	78.74
2	2.54	5.08	12	27.94	30.48	22	53.34	55.88	32	78.74	81.28
3	5.08	7.62	13	30.48	33.02	23	55.88	58.42	33	81.28	83.82
4	7.62	10.16	14	33.02	35.56	24	58.42	60.96	34	83.82	86.36
5	10.16	12.70	15	35.56	38.10	25	60.96	63.50	35	86.36	88.90
6	12.70	15.24	16	38.10	40.64	26	63.50	66.04	36	88.90	91.44
7	15.24	17.78	17	40.64	43.18	27	66.04	68.58	37	91.44	93.98
8	17.78	20.32	18	43.18	45.72	28	68.58	71.12	38	93.98	96.52
9	20.32	22.86	19	45.72	48.26	29	71.12	73.66	39	96.52	99.06
10	22.86	25.40	20	48.26	50.80	30	73.66	76.20	40	99.06	101.60

深圳市韩下电子有限公司
Shenzhen Hanxia Electronic Co., Ltd
Tel: 0755-23086569

承　认　书

SPECIFICATION FOR APPROVAL

产 品 编 码
Material code: _____

产品名称 Project：排母

规格型号 Part No：HX PM2.54-1x2P WT

贵公司承认印 Approal slgnatures

料 号/Part No.	签　章/Signatures

日期 Date:

拟制/Drawn	黄彬	深圳市韩下电子有限公司 工程专用章
审核/Check	张伟	
批准/Approved	罗小春	

深圳市韩下电子有限公司