NOTICE OF PROPRIETARY RIGHTS THIS DOCUMENT CONTAINS CONFIDENTIAL TECHNICAL DATA, INCLUDING TRADE SECRETS, PROPRIETARY TO TIMES MICROWAVE SYSTEMS. DISCLOSURE OF THIS DATA IS EXPRESSLY CONDITIONED UPON YOUR ASSENT THAT ITS USE IS LIMITED TO USE WITHIN YOUR COMPANY ONLY. ANY OTHER USE IS STRICTLY PROHIBITED WITHOUT THE PRIOR WRITTEN CONSENT OF TIMES MICROWAVE SYSTEMS.

SYM	REVISION DESCRIPTION	DFTM	DATE	APPD	DATE
A	RELEASED FOR PRODUCTION	K.A.M.	2/24/10	J.D.B.	3/11/10
B	CHANGED PER CDC #34322	D.J.H.	10/12/11	J.D.B.	10/27/11

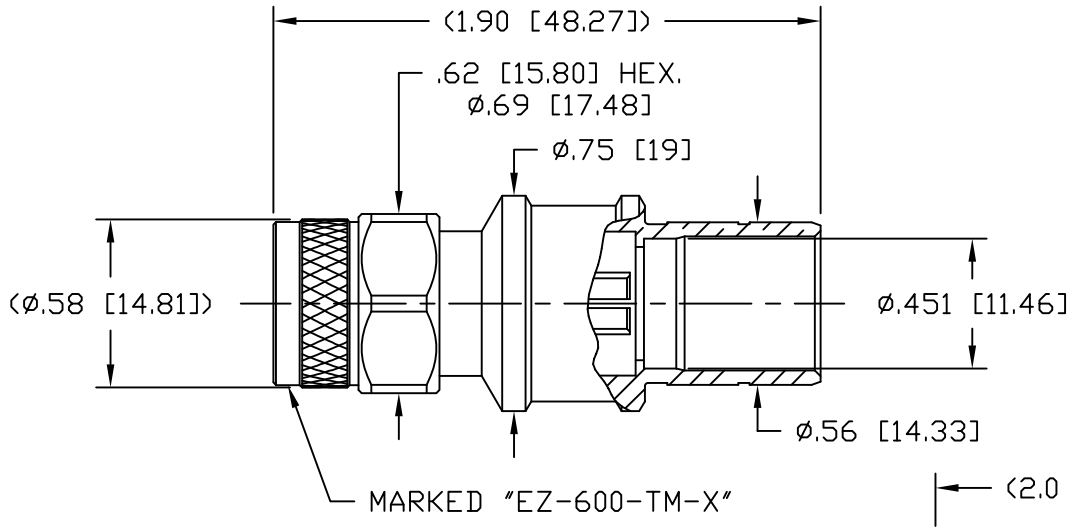

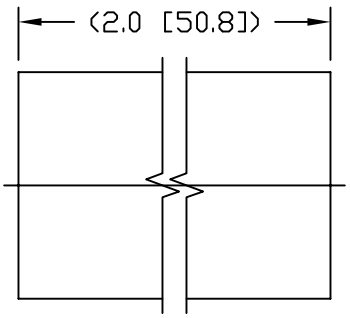

HEAT SHRINK TUBING

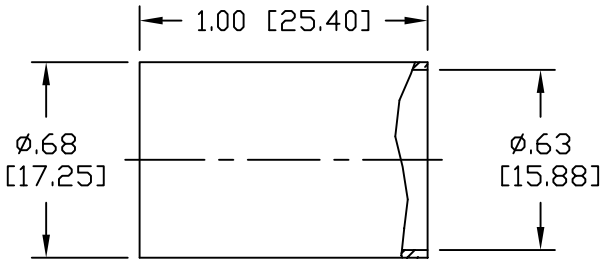

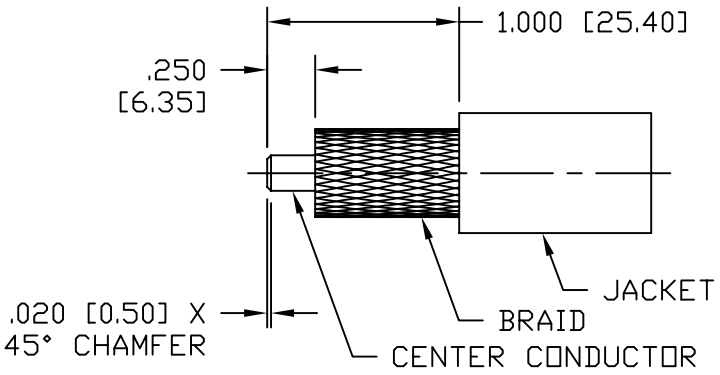

CABLE TRIMMING DIMENSIONS

NOTES:
1. MATERIALS AND FINISHES:
   BODY: BRASS, ALBALOY PLATING
   COUPLING NUT: BRASS, ALBALOY PLATING
   CENTER CONTACT: BERYLLIUM COPPER, GOLD PLATE
   INSULATOR: PTFE, NATURAL
   FERRULE: COPPER, ALBALOY PLATING
2. ELECTRICAL:
   IMPEDANCE: 50 OHMS NOMINAL
   FREQUENCY: DC-6 GHz
   VSWR: 1.2 DC-6 GHz
   DIELECTRIC WITHSTANDING VOLTAGE: 1,500 VOLTS RMS
3. MECHANICAL:
   DURABILITY: 500 CYCLES MIN.
   TEMPERATURE RANGE: -65°C TO +165°C
4. CABLING INSTRUCTIONS:
   A. SLIDE FERRULE OVER CABLE JACKET
   B. TRIM CABLE TO DIMENSIONS SHOWN. MAKE SURE CUTS ARE SHARP AND SQUARE. DO NOT NICK BRAID OR CENTER CONDUCTOR.
   C. FLAIR BRAID SLIGHTLY AND INSERT CABLE INTO BODY UNTIL BOTTOMED. (CONTACT SUPPLIED ASSEMBLED.) SLIDE THE FERRULE UP THE CABLE AND OVER THE BRAID UNTIL BOTTOMED ON BODY. CRIMP FERRULE USING A .612 HEX.

MATL:	UNLESS OTHERWISE SPECIFIED	DFTM. K. A. M.	TIMES MICROWAVE SYSTEMS
	ALL DIMENSIONS ARE IN INCHES MACHINED SURFACES FINISH 32 RMS MAX. REMOVE ALL BURRS .005 MAX. BREAK MACHINE CORNERS .005 MAX. FILLET R. TOLERANCES ON DECIMALS .XX ±.01 .XXX ±.005 ANGLES ±1° FRACTIONS ±1/64	DATE 2/24/10 CHKD. J. D. B. DATE 3/11/10 APPD. J. D. B.	**EZ-600-TM-X** PLUG, TNC, EZ FOR LMR-600
USED ON: A			
SCALE: ~ DWG. SIZE A	DO NOT SCALE DRAWING CODE IDENT 68999	DATE 3/11/10	SHT 1 of 1 SD3190-2531 REV B

Unikeyic Electronics

Global Electronic Components Distributor

Click to view pricing, inventory, delivery, and lifecycle information:

Fairview Microwave:

SM4961 SM4985 FMCN1589 SA18H-10 SM3310 SM5723 FMAD1116 SM3416 ST-SMA9 FMAD1608
FMCN1365 SM4940 SM4953 FMAD1206 SM4208 SM4965 FMAD1026 FMCN1351 SC5504 SM3130
SM4228 FMC0222085-12 SA18E-30 SC4821 SM3415 SM4232 SM4947 FMAD1218 SM4968 SM3010