8796 LC Zyklop "flexible-lock" extension with free-turning sleeve, long, 1/2", 1/2" x 250 mm

The Zyklop Ratchets, 1/2"



EAN:	4013288121462	**Size:**	315x44x25 mm
Part number:	05003643001	**Weight:**	427 g
Article number:	8796 LC	**Country of origin:**	CZ
		Customs tariff number:	82042000

- 1/2" Zyklop "flexible-lock" extension with free-turning sleeve, long
- For 1/2" square sockets with ball lock
- Flexible lock system for either locking or rapid exchange of the attached tool
- With free-turning sleeve for rapid tightening and loosening of screws and nuts
- Chrome vanadium steel, matt chrome-plated

Wera Zyklop extension with flexible-lock: when activated the sockets are secured and permanently fixed, any unintentional loss being avoided. When the system is deactivated, the sockets can be quickly attached and exchanged. Equipped with a free-turning sleeve for faster turning of screws and nuts.

Web link
http://products.wera.de/en/tools_for_the_aerospace_segment_ratchets_the_zyklop_ratchets_1_2_8796_lc.html

Wera Werkzeuge GmbH
Korzerter Straße 21-25
D-42349 Wuppertal
Tel: +49 (0)2 02 / 40 45-0
E-Mail: info@wera.de

8796 LC Zyklop "flexible-lock" extension with free-turning sleeve, long, 1/2", 1/2" x 250 mm

The Zyklop Ratchets, 1/2"



With easy-to-grip free-turning sleeve for rapid tightening and loosening of screws and nuts

Flexible-lock-system

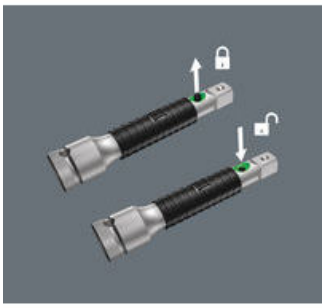

The extensions from the premium lines are also equipped with the unique “flexible-lock-system". By activating this system, attachments can be fixed to the extension permanently – preventing slipping and any unintentional loss of the attachment. When the system is deactivated, the sockets can be attached as usual and changed in a flash.

Free-turning sleeve



The free-turning sleeve on the Zyklop Speed and the Zyklop extension effectively accelerates the turning of screws and nuts.

Further versions in this product family:

		mm
05003643001	1/2"	250.0

Web link

http://products.wera.de/en/tools_for_the_aerospace_segment_ratchets_the_zyklop_ratchets_1_2_8796_lc.html

Wera - 8796 LC
05003643001 - 4013288121462

Wera Werkzeuge GmbH
Korzerter Straße 21-25
D-42349 Wuppertal
Tel: +49 (0)2 02 / 40 45-0
E-Mail: info@wera.de