| REVISION RECORD | | | | |
|---|---|---|---|---|
| REV | ECO | DESCRIPTION | DRFT | CHKD |
| | | | | |

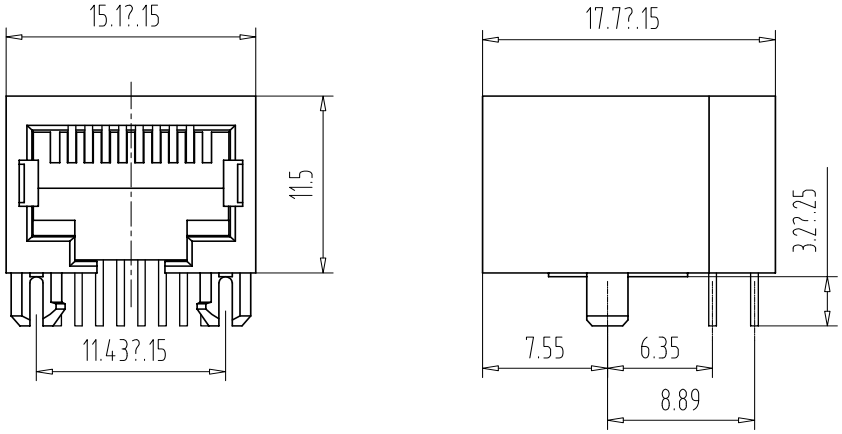


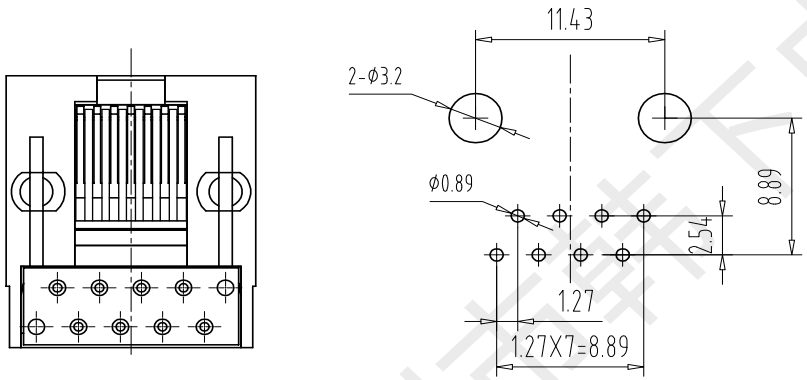


PC Board Layout

Component Side Shown

## Specifications:

1. Electrical:
   Rated voltage and current: 125V 1.5A Max
   Contact resistance: 50mΩ Max Initial state
   100mΩ Max End state
   Insulation resistance: 500MΩ Min
   Withstand Voltage: AC 1000V
2. Mechanical:
   Durability: 750 Cycles 20-30Cycles/Min
3. Matorial:
   Housing: Glass Filled Polyester UL94V-0
   Contact: Phosphor Bronze
   Plating: Gold Plating Fu " 50u " Over Nickel
4. Temperature Range: -25℃ to +85℃.
5. Welding temperature: 260±5℃ 3±0.5S

深圳市韩下电子有限公司

| | | | |
|---|---|---|---|
| MM (INCH) | DFTO: 黄彬 DATE: 2020.8.25 | 深圳市韩下电子有限公司 | |
| TOLERANCES EXCEPT AS NOTED | CHKD: 张伟 DATE: 2020.8.25 | | |
| MM .0 ± 0.15 ± .00 ± 0.075 ± .000 ± 0.05 ± | MFO: DATE: | TITLE | |
| ANGLES ± 0.5 | APPVL: 罗小春 DATE: 2020.8.25 | HX-RJ45 90 5622-1x1 10P8C S-Y | |
| THIRD ANGLE PROJECTION | MATERIAL : | DRAWING NO. E56B1001 | SIZE A3 / REV 0 |
| DETACHED LISTS | Q'TY : | PART NO. | |
| | FINISH : | DO NOT SCALE DRAWING | SHEET X OF Y |
| | SCALE : | | |

8 7 6 5 4 3 2 1

H G F E D C B A

深圳市韩下电子有限公司
Shenzhen Hanxia Electronic Co., Ltd
Tel: 0755-23086569

# 承　认　书

# SPECIFICATION FOR APPROVAL

**产 品 编 码**
**Material code:** _____

产品名称 Project：以太网连接器

规格型号 Part No：HX-RJ45 90 5622-1x1 10P8C S-Y

**贵公司承认印 Approal slgnatures**

| 料 号/Part No. | 签　章/Signatures |
|---|---|
| | |

日期 Date:

| | | |
|---|---|---|
| 拟制/Drawn | 黄彬 | 深圳市韩下电子有限公司 工程专用章 |
| 审核/Check | 张伟 | |
| 批准/Approved | 罗小春 | |

深圳市韩下电子有限公司