NOTES:

1. MATERIAL: AS NOTED
2. FINISH: AS NOTED
3. ELECTRICAL:
   CABLE TYPE (SEE SHEET 2)
   CURRENT: 10 A
4. PROTECTION: IP67 (WHEN MATED)
5. UL CERTIFICATION: UL LISTED, FILE NO. E152210
6. LABEL PRINTING ACC. STANDARD LABEL INSTRUCTION (SEE SHEET 2)

WIRING DIAGRAM

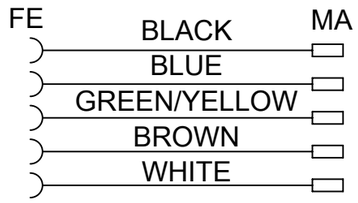

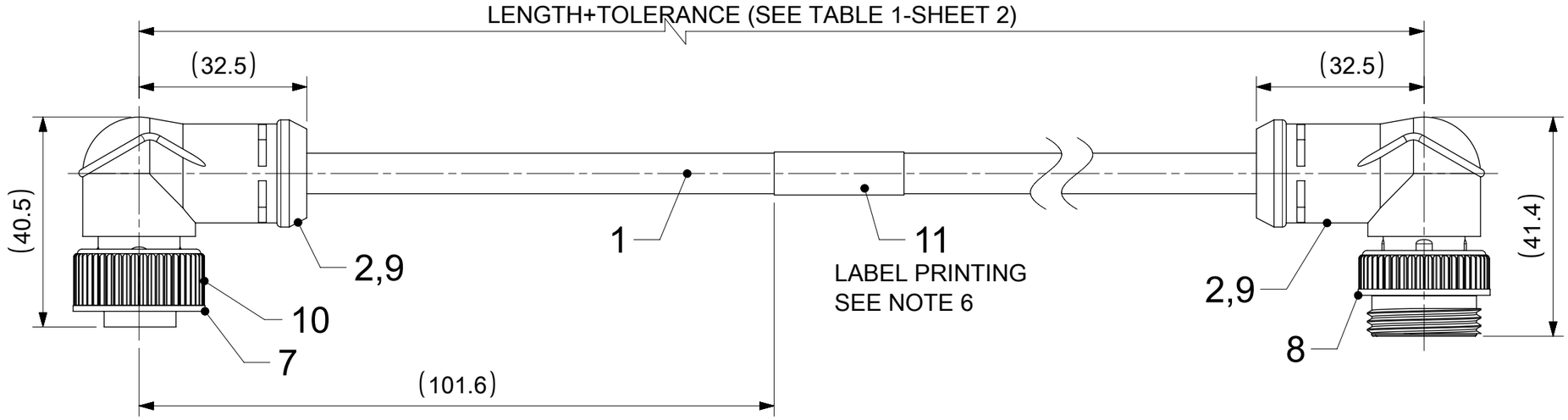

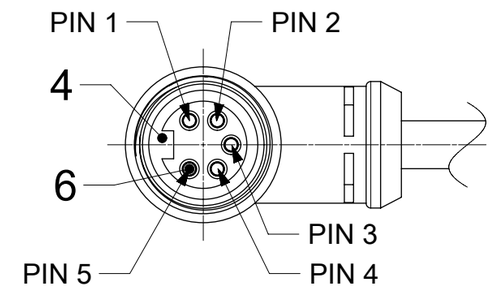

VIEW FROM THE FRONT SIDE

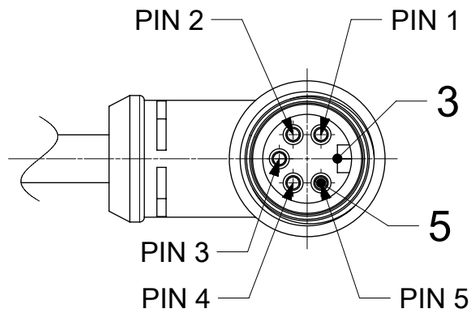

VIEW FROM THE FRONT SIDE

BILL OF MATERIAL

ITEM	QTY	DESCRIPTION	MATERIAL	FINISH/COLOR
11	1	LABEL;2.0X1.75;WRAP	VINYL	YELLOW
10	1	FRICTION RING - A SIZE	NYLON	-
9	-	TAPE;0.165MMx9MM	POLYSILOXANE	WHITE
8	1	MC COUPLING NUT A-SIZE	ZINC	BLACK
7	1	COUPLING NUT MC A-SIZE EXT.THD	ZINC	BLACK
6	5	MC SOCKET SLEEVE ASSY, 16 AWG	BRASS	GOLD
5	5	MC PIN CONTACT 16AWG	BRASS	GOLD
4	1	5P FEMALE INSERT A SIZE	PUR	BLACK
3	1	5P MALE INSERT A SIZE	PUR	BLACK
2	-	MOULDING MATERIAL	TPU	BLACK
1	-	CABLE 5/C, OD=8.5mm	TPU	GRAY

DOCUMENT STATUS | P1 | RELEASE DATE | 2023/04/27 12:11:52

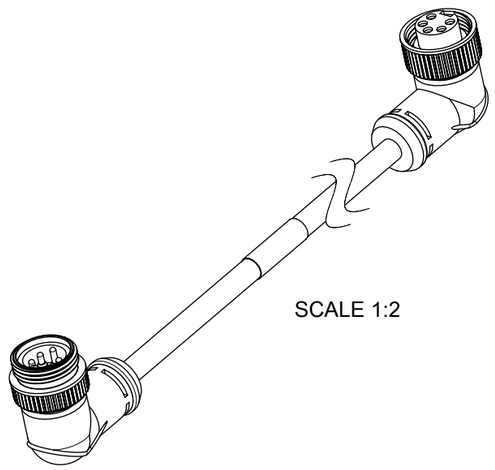

SCALE 1:2

THIS DRAWING CONTAINS INFORMATION THAT IS PROPRIETARY TO MOLEX ELECTRONIC TECHNOLOGIES, LLC AND SHOULD NOT BE USED WITHOUT WRITTEN PERMISSION

FUNCTIONAL SYMBOLS: FA = 0, FC = 0, FP = 0

DIVISIONAL SYMBOLS

DIMENSION UNITS	SCALE
mm	1:1

GENERAL TOLERANCES (UNLESS SPECIFIED)

ANGULAR TOL	±	1.0 °
4 PLACES	±	
3 PLACES	±	
2 PLACES	±	0.05
1 PLACE	±	0.3
0 PLACES	±	0.5

DRAFT WHERE APPLICABLE MUST REMAIN WITHIN DIMENSIONS

CURRENT REV DESC: NOTES AND CABLE SPEC UPDATED, LABEL PRINTING ADDED

EC NO: 747270
DRWN: RSCHIEBER 2023/04/21
CHK'D: RSILLER 2023/04/27
APPR: RSILLER 2023/04/27

INITIAL REVISION:
DRWN: RSTONE 2013/12/09
APPR: JFMURPHY 2013/12/16

THIRD ANGLE PROJECTION

DRAWING	SERIES
A3-SIZE	130010

molex

CSE MC 5P A-SIZE FE RA MA RA TPU XM

PRODUCT CUSTOMER DRAWING

DOCUMENT NUMBER	DOC TYPE	DOC PART	REVISION
SD-130010-031	PSD	001	A3

MATERIAL NUMBER	CUSTOMER	SHEET NUMBER
SEE TABLE 1	GENERAL MARKET	1 OF 2

FORMAT: master_tb_mod-A3
REVISION: J1
DATE: 2021/05/01

PART No. MATRIX

1	1	5	0	3	3	B	X	X	M	X	X	X	X

- 11 = A-SIZE double ended
- Poles: 5 = 5 Poles
- Heads style: 033 = Female 90°/Male 90°
- Cable: B21 = 5x1.5mm² 7.8mm PUR GY; B35 = 5x1.5² 8.5mm PUR GY
- Units: M = Meters
- Length Examples: 005 = 0.5 m; 010 = 1 m; 050 = 5 m; 100 = 10 m; 150 = 15 m
- Moulding color: blank=Black PUR (standard); A=Grey; G=Yellow

CABLE TYPE	No. OF WIRES	CROSS SECTION	CABLE JACKET	UL	CSA	STATIC: TEMP. / BENDING RADIUS	DYNAMIC: TEMP / BENDING RADIUS	VOLTAGE
B21	5	1.5 mm²	TPU GREY	UL STYLE 758	C22.2	-40°C to + 80°C	-5 °C TO +80 °C	300 V
B35	5	1.5 mm²	TPU GREY	UL STYLE 758	C22.2	-40°C to + 90°C	-25 °C TO +80 °C	600 V

TABLE 1

MOLEX PN	ENGINEERING NO.	L+Tol.[mm]
1300108036	115033B21M010	1000 +56
1300108037	115033B21M020	2000 +89
1300108038	115033B21M030	3000 +89
1300108039	115033B21M050	5000 +165
1300108040	115033B21M100	10000 +317
1300108041	115033B21M150	15000 +610
1300108042	115033B21M200	20000 +610
1300108051	115033B35M010	1000 +56
1300108052	115033B35M020	2000 +89
1300108053	115033B35M030	3000 +89
1300108054	115033B35M050	5000 +165
1300108055	115033B35M100	10000 +317
1300108056	115033B35M150	15000 +610
1300108057	115033B35M200	20000 +610

LABEL PRINTING

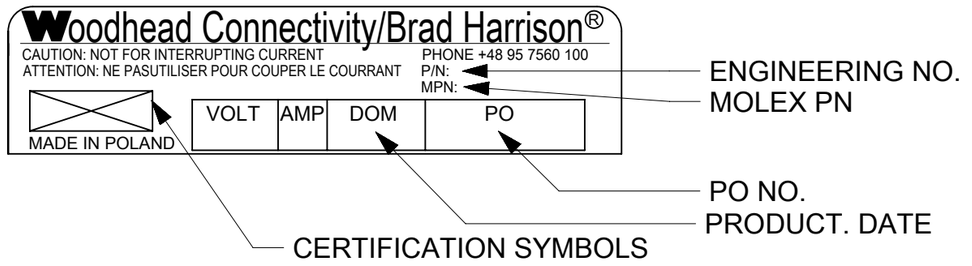

THIS DRAWING CONTAINS INFORMATION THAT IS PROPRIETARY TO MOLEX ELECTRONIC TECHNOLOGIES, LLC AND SHOULD NOT BE USED WITHOUT WRITTEN PERMISSION

FUNCTIONAL SYMBOLS: FA = 0; FC = 0; FP = 0

DIVISIONAL SYMBOLS

DIMENSION UNITS	SCALE
mm	1:1

GENERAL TOLERANCES (UNLESS SPECIFIED)

ANGULAR TOL	±	1.0 °
4 PLACES	±	
3 PLACES	±	
2 PLACES	±	0.05
1 PLACE	±	0.3
0 PLACES	±	0.5

DRAFT WHERE APPLICABLE MUST REMAIN WITHIN DIMENSIONS

CURRENT REV DESC: NOTES AND CABLE SPEC UPDATED, LABEL PRINTING ADDED

EC NO: 747270
DRWN: RSCHIEBER 2023/04/21
CHK'D: RSILLER 2023/04/27
APPR: RSILLER 2023/04/27

INITIAL REVISION:
DRWN: RSTONE 2013/12/09
APPR: JFMURPHY 2013/12/16

THIRD ANGLE PROJECTION | DRAWING: A3-SIZE | SERIES: 130010

molex

CSE MC 5P A-SIZE FE RA MA RA TPU XM

PRODUCT CUSTOMER DRAWING

DOCUMENT NUMBER	DOC TYPE	DOC PART	REVISION
SD-130010-031	PSD	001	A3

MATERIAL NUMBER	CUSTOMER	SHEET NUMBER
SEE TABLE 1	GENERAL MARKET	2 OF 2

DOCUMENT STATUS	P1	RELEASE DATE	2023/04/27 12:11:52

FORMAT: master_tb_mod-A3
REVISION: J1
DATE: 2021/05/01