# MUR1060/MUR1060F

## Super-Fast Recovery Diodes 10A FRD Pt

### Features

- Adopt FRD chip
- Low forward Voltage drop
- Fast reverse recovery time
- High frequency operation
- High purity, high temperature epoxy encapsulation for enhanced mechanical strength and moisture resistance
- Guard ring for enhanced ruggedness and long term reliability

**TO-220AC**
**MUR1060**

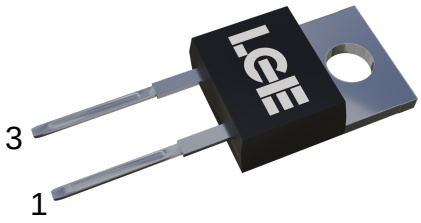


### Typical Applications

Typical applications are in switching power supplies, converters, freewheeling diodes, and reverse battery protection.

**ITO-220AC/TO-220F**
**MUR1060F**

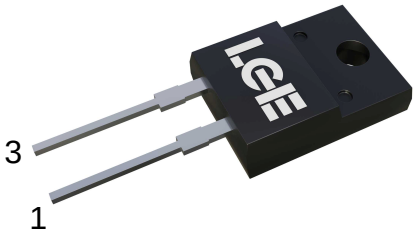


### Mechanical Data

- **Package**: TO-220AC ITO-220AC/TO-220F
  Molding compound meets UL 94 V-0 flammability rating, RoHS-compliant
- **Terminals**: Tin plated leads, solderable per J-STD-002 and JESD22-B102
  **Polarity**: As marked

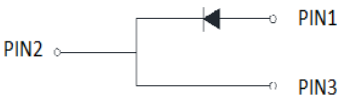


### ■Maximum Ratings ($T_a$=25℃ Unless otherwise specified)

| TYPE | $V_{RSM}$ V | $V_{RRM}$ V |
|---|---|---|
| **MUR1060** | 600 | 600 |
| **MUR1060F** | 600 | 600 |

| Symbol | Test Conditions | | Maximum Ratings | Unit |
|---|---|---|---|---|
| $I_{FRMS}$<br>$I_{FAVM}$<br>$I_{FRM}$ | $T_{VJ}=T_{VJM}$<br>$T_C$=115°C; rectangular, d=0.5<br>$t_p$<10us; rep. rating, pulse width limited by $T_{VJM}$ | | 20<br>10<br>130 | A |
| $I_{FSM}$ | $T_{VJ}$=45°C | t=10ms (50Hz), sine<br>t=8.3ms (60Hz), sine | 100<br>110 | A |
| | $T_{VJ}$=150°C | t=10ms(50Hz), sine<br>t=8.3ms(60Hz), sine | 85<br>95 | |
| $I^2t$ | $T_{VJ}$=45°C | t=10ms (50Hz), sine<br>t=8.3ms (60Hz), sine | 50<br>50 | $A^2s$ |
| | $T_{VJ}$=150°C | t=10ms(50Hz), sine<br>t=8.3ms(60Hz), sine | 36<br>37 | |
| $T_{VJ}$<br>$T_{VJM}$<br>$T_{stg}$ | | | -40...+150<br>150<br>-40...+150 | °C |
| $P_{tot}$ | $T_C$=25°C | | 50 | W |
| $M_d$ | Mounting torque | | 0.4...0.6 | Nm |
| Weight | typical | | 2 | g |

# MUR1060/MUR1060F

**Super-Fast Recovery Diodes 10A FRD Pt**

## ■Electrical Characteristics

| Symbol | Test Conditions | Characteristic Values typ. | max. | Unit |
|---|---|---|---|---|
| $I_R$ | $T_{VJ}$=25°C; $V_R$=$V_{RRM}$<br>$T_{VJ}$=25°C; $V_R$=0.8·$V_{RRM}$<br>$T_{VJ}$=125°C; $V_R$=0.8·$V_{RRM}$ | | 10<br>5<br>1.5 | uA<br>uA<br>mA |
| $V_F$ | $I_F$=10A $_{VJ}$=150°C<br>$T_{VJ}$=25°C | | 1.45<br>1.70 | V |
| $V_{TO}$ | For power-loss calculations only | | 0.98 | V |
| $r_T$ | $T_{VJ}$=$T_{VJM}$ | | 28.7 | mΩ |
| $R_{thJC}$<br>$R_{thCK}$<br>$R_{thJA}$ | | 0.5 | 2.5<br><br>60 | K/W |
| $t_{rr}$ | $I_F$=0.5A $I_{RM}$=1A $I_{RR}$=0.25A Tj=25℃ | 35 | 50 | ns |
| $I_{RM}$ | $V_R$=350V; $I_F$=10A $_F$/dt=64A/us; L≤0.05uH; $T_{VJ}$=100°C | 2.5 | 2.8 | A |

## ■Thermal Characteristics （$T_a$=25℃ Unless otherwise specified）

| PARAMETER | | SYMBOL | UNIT | MUR1060/MUR1060F |
|---|---|---|---|---|
| Thermal Resistance | Between junction and case | $R_{\theta J-C}$ | ℃/W | 4.0 |
| | Between junction and Air | $R_{\theta J-A}$ | ℃/W | 50 |

## ■Characteristics (Typical)

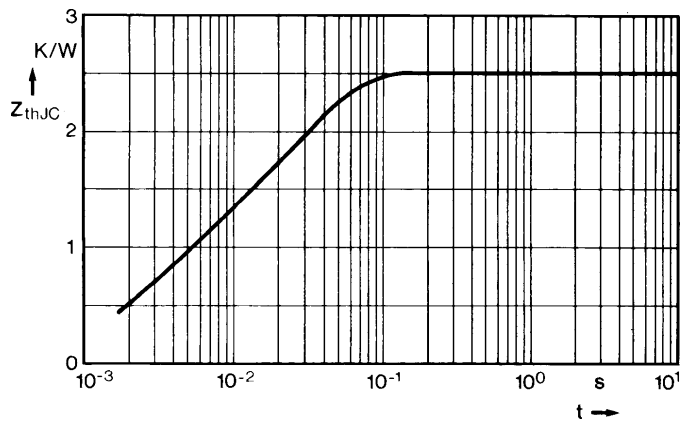


Fig. 7 Transient thermal impedance junction to case.

# MUR1060/MUR1060F

## Super-Fast Recovery Diodes 10A FRD Pt

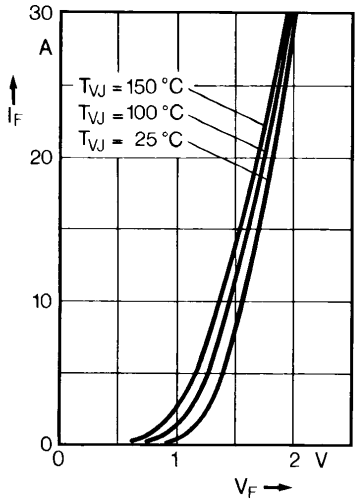


Fig. 1 Forward current versus voltage drop.

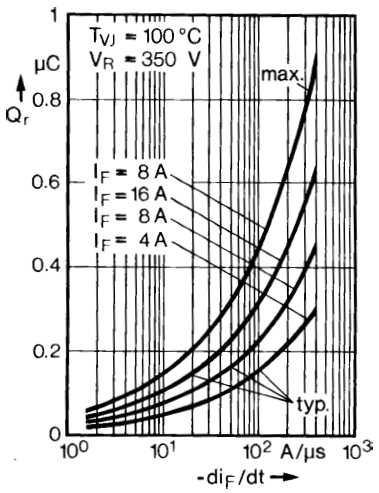


Fig. 2 Recovery charge versus $-di_F/dt$.

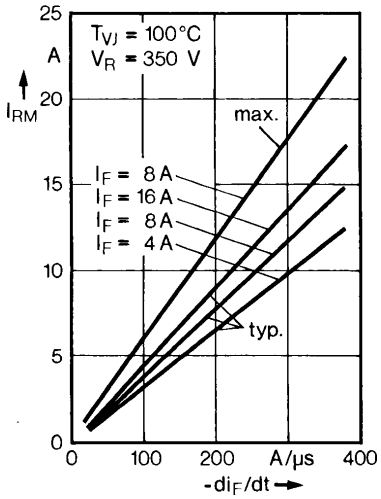


Fig. 3 Peak reverse current versus $-di_F/dt$.

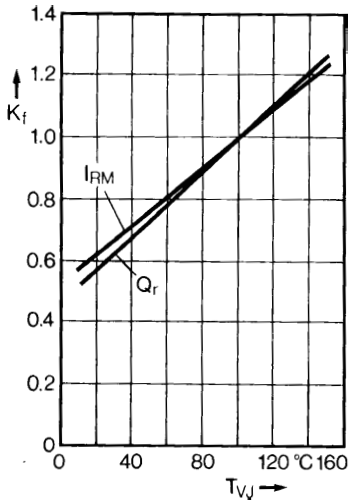


Fig. 4 Dynamic parameters versus junction temperature.

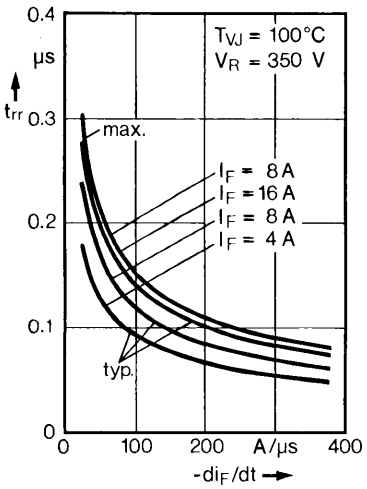


Fig. 5 Recovery time versus $-di_F/dt$.

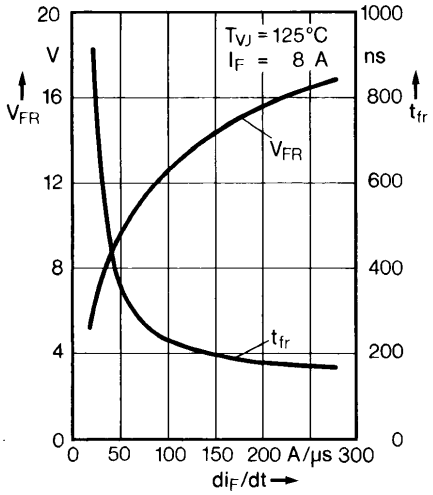


Fig. 6 Peak forward voltage versus $di_F/dt$.

**FIG.5: Diagram of circuit and Testing wave form of reverse recovery time**

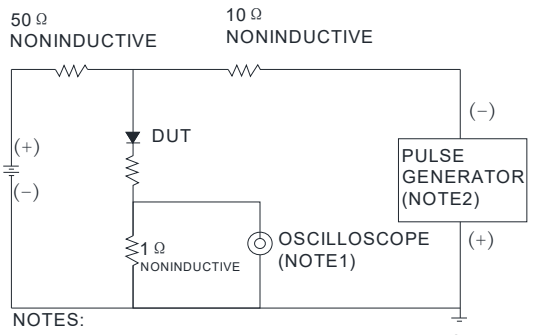


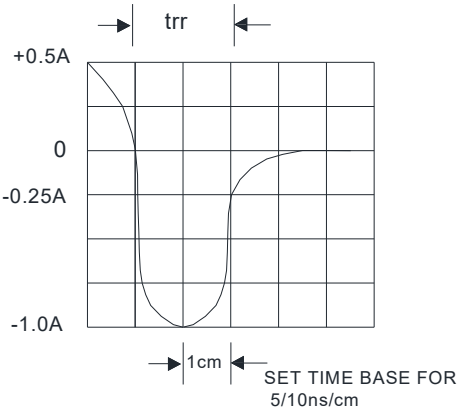

# MUR1060/MUR1060F

**Super-Fast Recovery Diodes 10A FRD Pt**

## ■Outline Dimensions

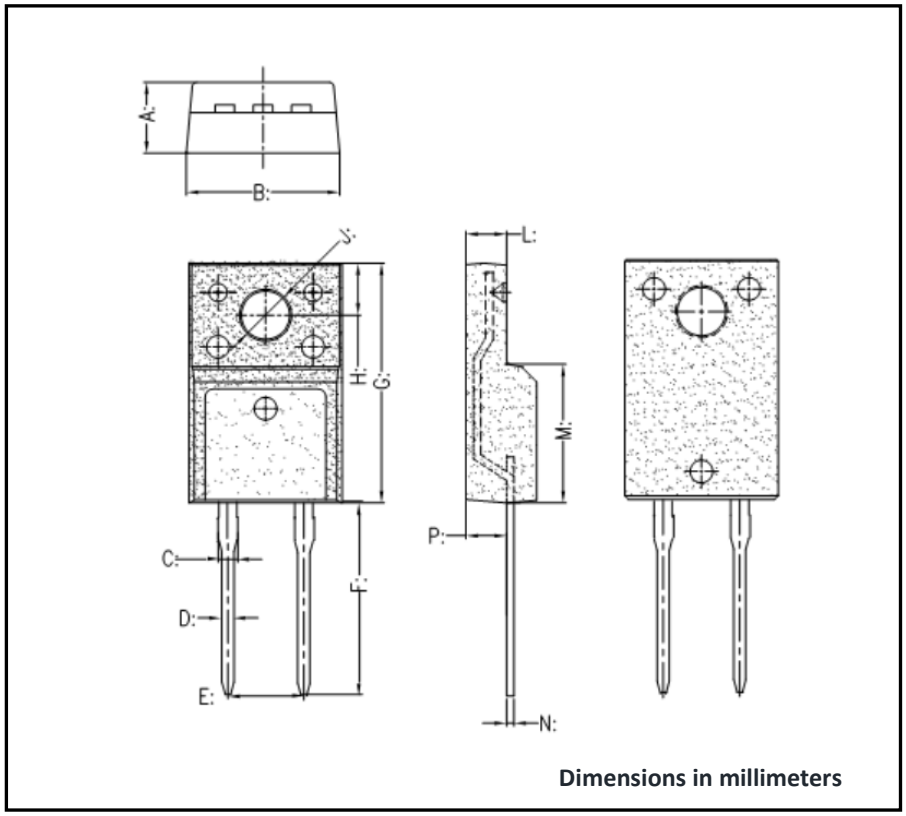


Dimensions in millimeters

| | ITO-220AC | |
|---|---|---|
| DIM | MIN | MAX |
| A | 4.6 | 4.8 |
| B | 10.05 | 10.25 |
| C | 1.2 | 1.4 |
| D | 0.7 | 0.9 |
| E | **5.0** | **5.2** |
| F | 12 | 15 |
| G | 15.8 | 16 |
| H | 3.35 | 3.55 |
| J | 3.1 | 3.3 |
| L | 2.6 | 2.8 |
| M | 9.1 | 9.3 |
| N | 0.4 | 0.6 |
| P | 2.6 | 2.8 |

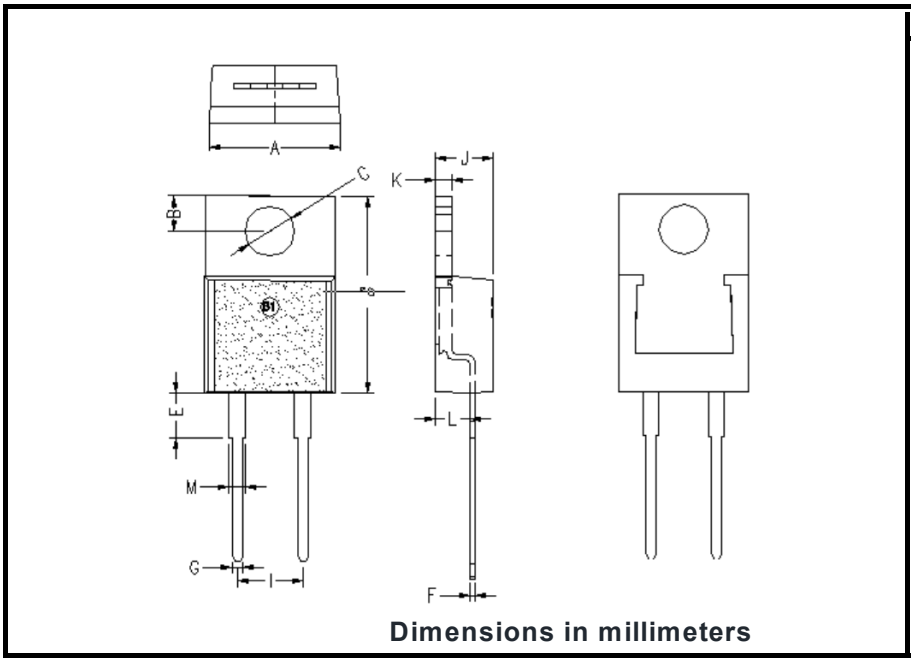


Dimensions in millimeters

| TO-220AC | | |
|---|---|---|
| Dim | Min | Max |
| A | 9.95 | 10.35 |
| B | 2.55 | 2.95 |
| C | 3.75 | 4.05 |
| D | 14.95 | 15.25 |
| E | 3.75 | 4.25 |
| F | 0.26 | 0.5 |
| G | 0.68 | 0.94 |
| H | 13.3 | 13.9 |
| I | 4.86 | 5.26 |
| J | 4.38 | 4.78 |
| K | 1.14 | 1.4 |
| L | 2.37 | 2.79 |

## ■Ordering Information (Example)

| PREFERED P/N | UNIT WEIGHT(g) | MINIIMUM PACKAGE(pcs) | INNER BOX QUANTITY(pcs) | OUTER CARTON QUANTITY(pcs) | DELIVERY MODE |
|---|---|---|---|---|---|
| **TO-220** | Approximate 1.6 | 50 | 1000 | 5000 | Tube |