DMP2045UQ-13

P-Channel Enhancement Mode MOSFET

Description

The DMP2045UQ-13 uses advanced trench technology to provide excellent $R_{DS(ON)}$, low gate charge and operation with gate voltages as low as 4.5V. This device is suitable for use as a Battery protection or in other Switching application.

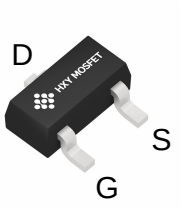

SOT-23-3L

General Features

V_{DS} = -20V I_D =-4.1A

$R_{DS(ON)}$ < 45mΩ@ V_{GS}= -4.5V

ESD Rating: 1500V HBM

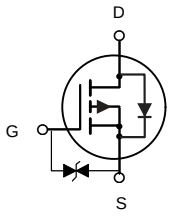

P-Channel MOSFET

Application

Battery protection

Load switch

Uninterruptible power supply

Package Marking and Ordering Information

Product ID	Pack	Brand	Qty(PCS)
DMP2045UQ-13	SOT-23-3L	HXY MOSFET	3000

Absolute Maximum Ratings (T_A=25°C unless otherwise noted)

Symbol	Parameter	Limit	Unit
V_{DS}	Drain-Source Voltage	-20	V
V_{GS}	Gate-Source Voltage	±10	V
I_D	Drain Current-Continuous	-4.1	A
I_{DM}	Drain Current-Pulsed (Note 1)	-30	A
P_D	Maximum Power Dissipation	1.4	W
T_J,T_{STG}	Operating Junction and Storage Temperature Range	-55 To 150	℃
$R_{\theta JA}$	Thermal Resistance,Junction-to-Ambient (Note 2)	89.3	℃/W

Electrical Characteristics (T_A=25°C unless otherwise noted)

Zero Gate Voltage Drain Current	I_{DSS}	V_{DS}=-20V,V_{GS}=0V	-	-	1	μA
Gate-Body Leakage Current	I_{GSS}	V_{GS}=±10V,V_{DS}=0V	-	-	±10	μA
On Characteristics (Note 3)						
Gate Threshold Voltage	$V_{GS(th)}$	V_{DS}=V_{GS},I_D=-250μA	-0.35	-0.55	-0.9	V
Drain-Source On-State Resistance	$R_{DS(ON)}$	V_{GS}=-4.5V, I_D=-4A	-	34	45	mΩ
		V_{GS}=-2.5V, I_D=-4A	-	44	60	mΩ
Forward Transconductance	g_{FS}	V_{DS}=-5V,I_D=-4A	8	-	-	S
Dynamic Characteristics (Note4)						
Input Capacitance	C_{lss}	V_{DS}=-10V,V_{GS}=0V, F=1.0MHz	-	950	-	PF
Output Capacitance	C_{oss}		-	165	-	PF
Reverse Transfer Capacitance	C_{rss}		-	120	-	PF
Switching Characteristics (Note 4)						
Turn-on Delay Time	$t_{d(on)}$	V_{DD}=-10V,R_L=2. 5Ω V_{GS}=-4.5V,R_{GEN}=3Ω	-	12	-	nS
Turn-on Rise Time	t_r		-	10	-	nS
Turn-Off Delay Time	$t_{d(off)}$		-	19	-	nS
Turn-Off Fall Time	t_f		-	25	-	nS
Total Gate Charge	Q_g	V_{DS}=-10V,I_D=-4A, V_{GS}=-4.5V	-	12	-	nC
Gate-Source Charge	Q_{gs}		-	1.4	-	nC
Gate-Drain Charge	Q_{gd}		-	3.6	-	nC
Drain-Source Diode Characteristics						
Diode Forward Voltage (Note 3)	V_{SD}	V_{GS}=0V,I_S=-4A	-	-	-1.2	V
Diode Forward Current (Note 2)	I_S		-	-	-4	A

Notes:

1. Repetitive Rating: Pulse width limited by maximum junction temperature.
2. Surface Mounted on FR4 Board, t ≤ 10 sec.
3. Pulse Test: Pulse Width ≤ 300μs, Duty Cycle ≤ 2%.
4. Guaranteed by design, not subject to production

Typical Electrical And Thermal Characteristics

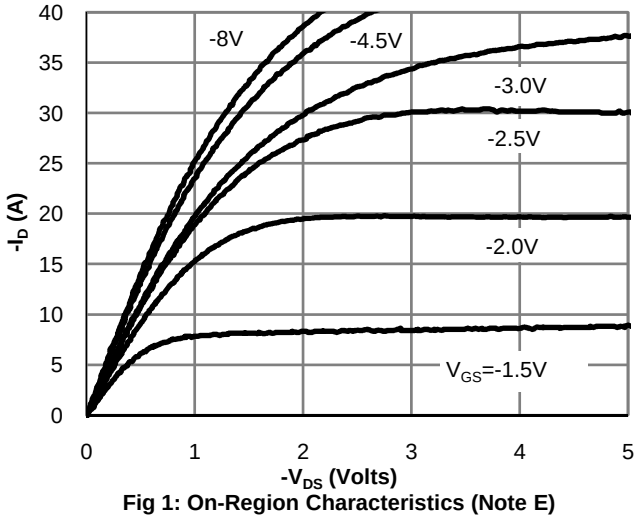

Fig 1: On-Region Characteristics (Note E)

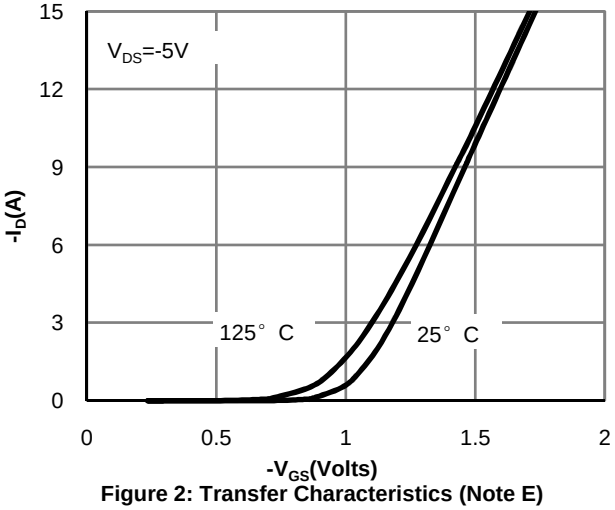

Figure 2: Transfer Characteristics (Note E)

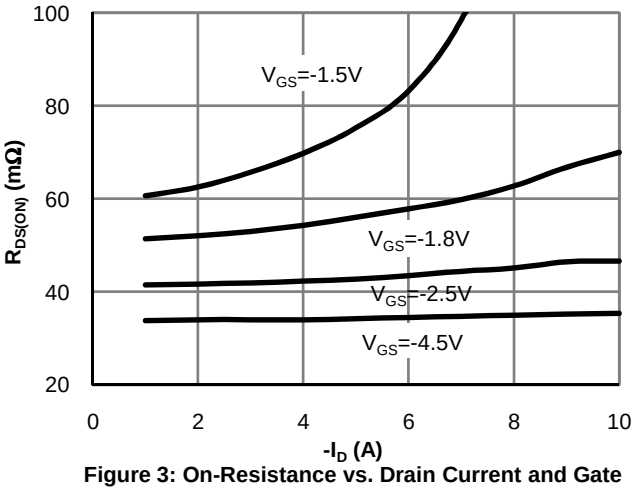

Figure 3: On-Resistance vs. Drain Current and Gate Voltage (Note E)

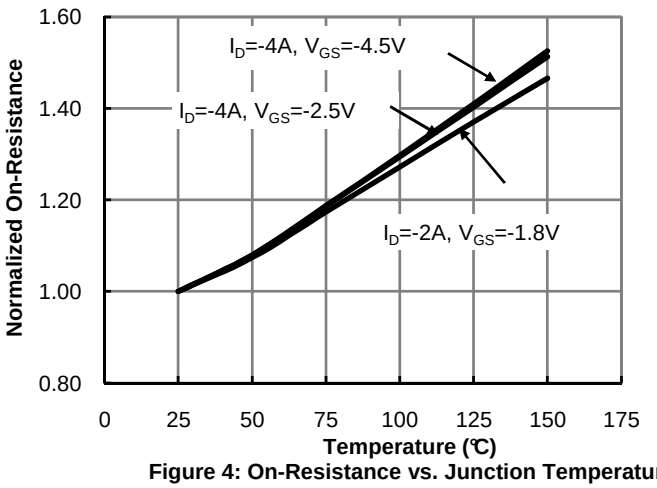

Figure 4: On-Resistance vs. Junction Temperature (Note E)

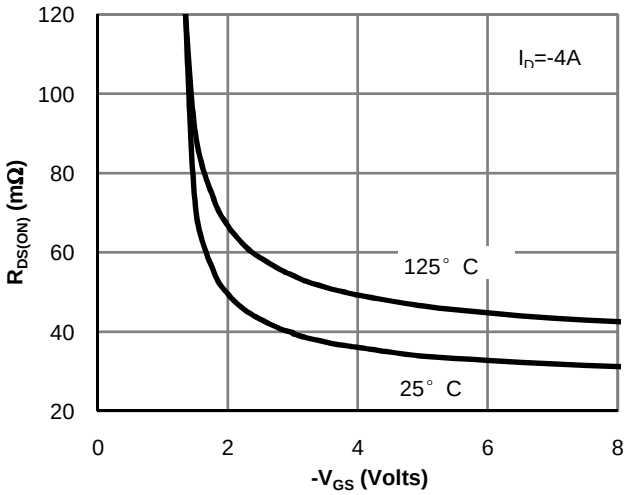

Figure 5: On-Resistance vs. Gate-Source Voltage (Note E)

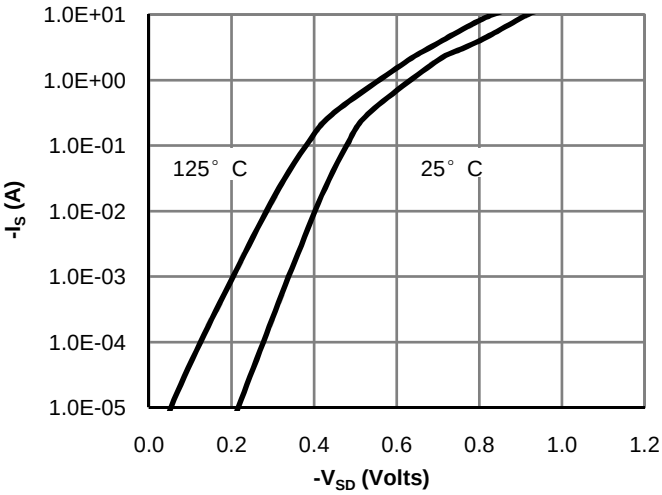

Figure 6: Body-Diode Characteristics (Note E)

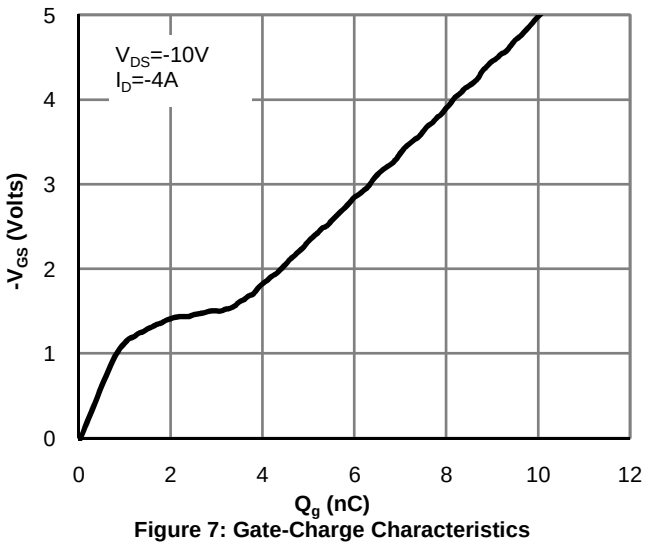

Figure 7: Gate-Charge Characteristics

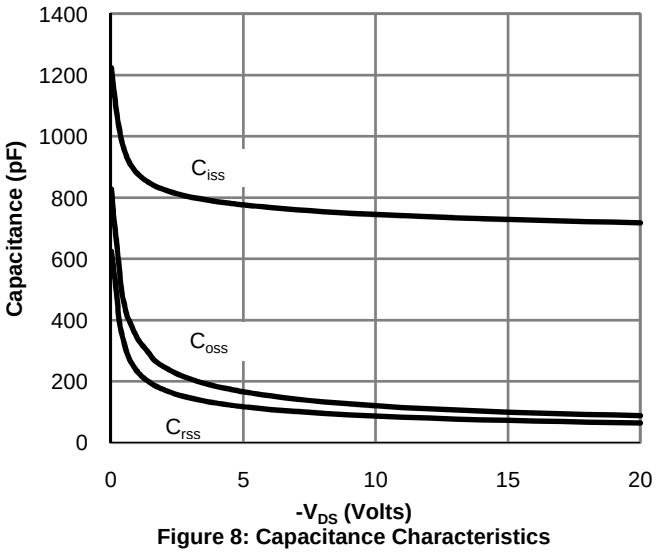

Figure 8: Capacitance Characteristics

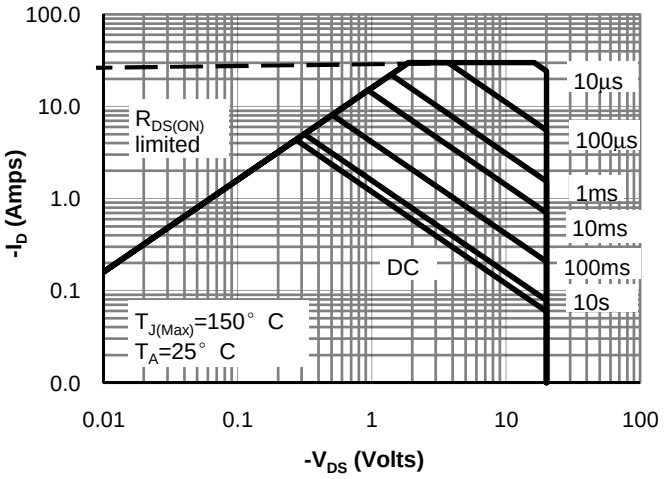

Figure 9: Maximum Forward Biased Safe Operating Area (Note F)

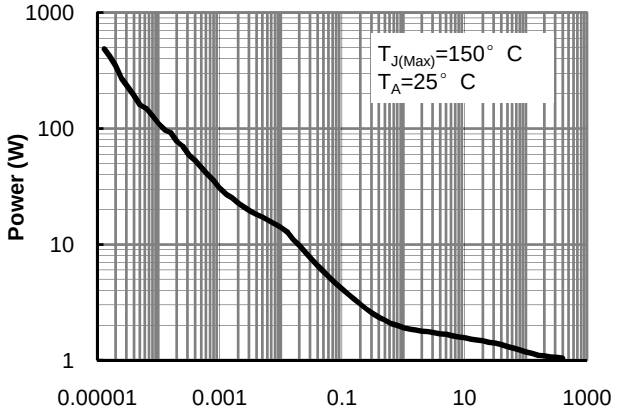

Figure 10: Single Pulse Power Rating Junction-to-Ambient (Note F)

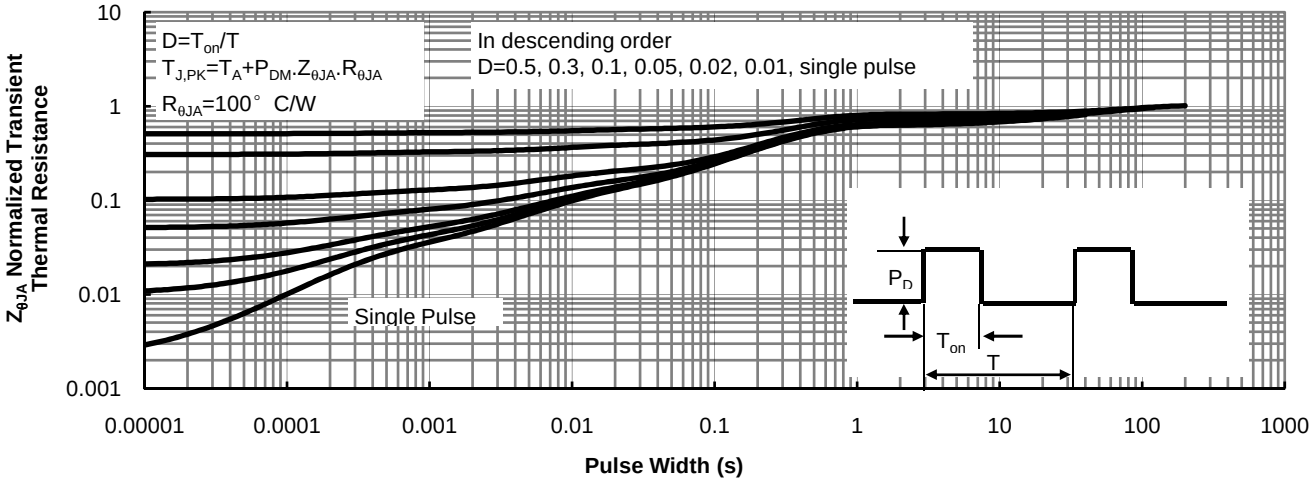

Figure 11: Normalized Maximum Transient Thermal Impedance (Note F)

Gate Charge Test Circuit & Waveform

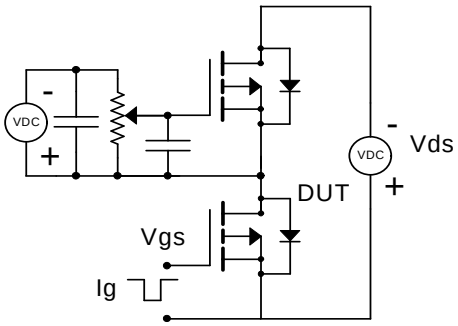

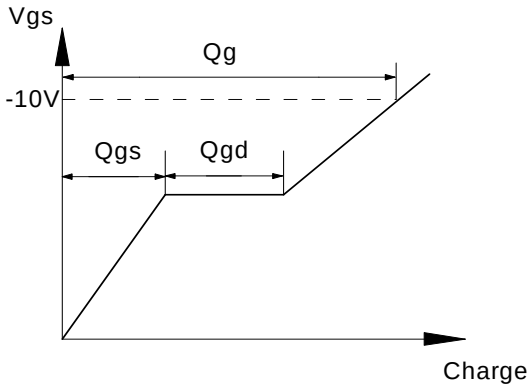

Resistive Switching Test Circuit & Waveforms

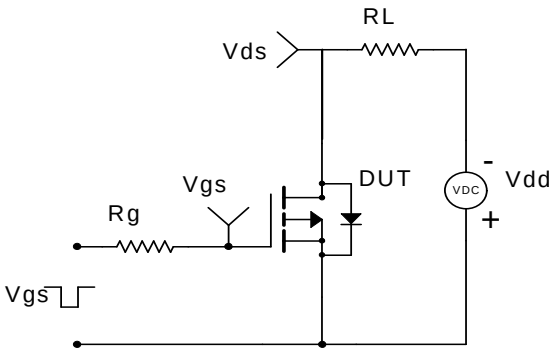

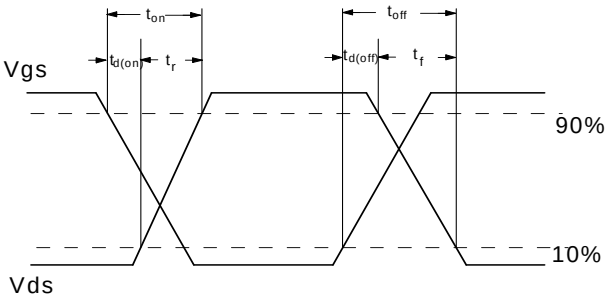

Diode Recovery Test Circuit & Waveforms

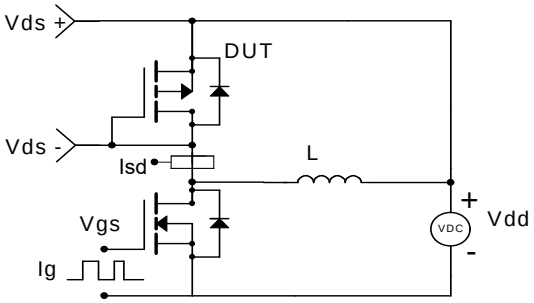

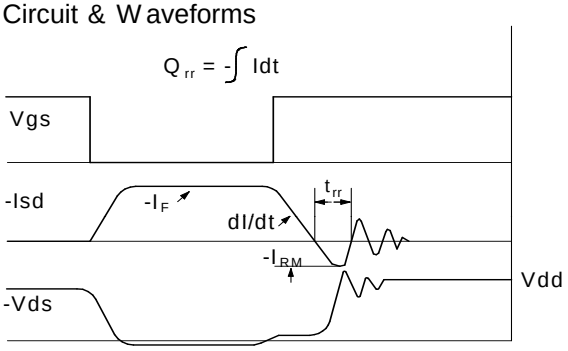

SOT-23-3L Package Information

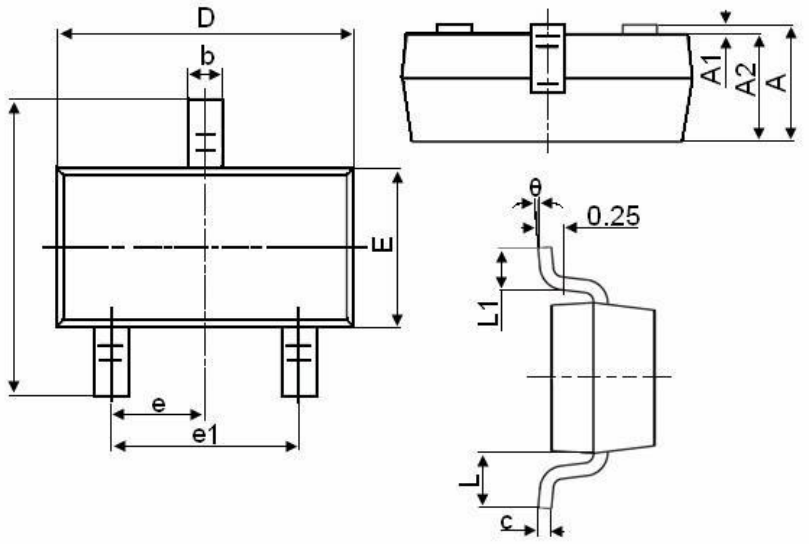

Symbol	Dimensions in Millimeters	
	MIN.	MAX.
A	1.050	1.250
A1	0.000	0.100
A2	1.050	1.150
b	0.300	0.500
c	0.100	0.200
D	2.800	3.000
E	1.500	1.700
E1	2.650	2.950
e	0.950TYP	
e1	1.800	2.000
L	0.550REF	
L1	0.300	0.600
θ	0°	8°

Attention

■ Any and all HUA XUAN YANG ELECTRONICS products described or contained herein do not have specifications that can handle applications that require extremely high levels of reliability, such as life-support systems, aircraft's control systems, or other applications whose failure can be reasonably expected to result in serious physical and/or material damage. Consult with your HUA XUAN YANG ELECTRONICS representative nearest you before using any HUA XUAN YANG ELECTRONICS products described or contained herein in such applications.

■ HUA XUAN YANG ELECTRONICS assumes no responsibility for equipment failures that result from using products at values that exceed, even momentarily, rated values (such as maximum ratings, operating condition ranges, or other parameters) listed in products specifications of any and all HUA XUAN YANG ELECTRONICS products described or contained herein.

■ Specifications of any and all HUA XUAN YANG ELECTRONICS products described or contained herein stipulate the performance, characteristics, and functions of the described products in the independent state, and are not guarantees of the performance, characteristics, and functions of the described products as mounted in the customer's products or equipment. To verify symptoms and states that cannot be evaluated in an independent device, the customer should always evaluate and test devices mounted in the customer's products or equipment.

■ HUA XUAN YANG ELECTRONICS CO.,LTD. strives to supply high-quality high-reliability products. However, any and all semiconductor products fail with some probability. It is possible that these probabilistic failures could
give rise to accidents or events that could endanger human lives, that could give rise to smoke or fire, or that could cause damage to other property. When designing equipment, adopt safety measures so that these kinds of accidents or events cannot occur. Such measures include but are not limited to protective circuits and error prevention circuits for safe design, redundant design, and structural design.

■ In the event that any or all HUA XUAN YANG ELECTRONICS products(including technical data, services) described or contained herein are controlled under any of applicable local export control laws and regulations, such products must not be exported without obtaining the export license from the authorities concerned in accordance with the above law.

■ No part of this publication may be reproduced or transmitted in any form or by any means, electronic or mechanical, including photocopying and recording, or any information storage or retrieval system, or otherwise, without the prior written permission of HUA XUAN YANG ELECTRONICS CO.,LTD.

■ Information (including circuit diagrams and circuit parameters) herein is for example only ; it is not guaranteed for volume production. HUA XUAN YANG ELECTRONICS believes information herein is accurate and reliable, but no guarantees are made or implied regarding its use or any infringements of intellectual property rights or other rights of third parties.

■ Any and all information described or contained herein are subject to change without notice due to product/technology improvement, etc. When designing equipment, refer to the "Delivery Specification" for the HUA XUAN YANG ELECTRONICS product that you intend to use.

Unikeyic Electronics

Global Electronic Components Distributor

Click to view pricing, inventory, delivery, and lifecycle information:

HXY MOSFET:

SQJA04EP-T1_BE3 BZT52C3V3S DTC143ZE HAD8542ARZ HESDNC5VB1AF-B HOPA2340UA HXY2101EI MAX487ESA HT7540-1 P6SMB33CA SS5150B US2M HC3D10170A P6SMB36CA PESD5V0S1BB SS10100 TPSMB28A-VR BZT52C13 HC4D20120A HMCP602-I/SN IRLML6246PBF SS510C TPSMB100CA-VR P6SMB200A HXY8205ES HT7150 MMBT3904T SS1045 HXY2300MI SD15C